VariTrac™ Changeover Bypass VAV

June 2004

VAV-PRC003-EN

© 2004 American Standard, Inc. All rights reserved

Contents

Introduction 4

Comfort Made Simple 4
The Changeover Bypass VAV Comfort Advantage 4
VariTrac Product Enhancements 4

Features and Benefits 5–12

Overview 6
Central Control Panel 7
Optional Operator Display 7
Communicating Bypass Controller 8
Tracker System Integration 8
VariTrac Bypass Dampers 9
VariTrac Zone Dampers 10
Unit Control Module 10
Zone Sensors 11–12

Application Considerations 13–24

Introduction 13
Zoning Considerations 13
Effective Changeover Bypass VAV System Design 14–19
Pressure Dependent vs. Pressure Independent 20
Local Reheat Capabilities Using VariTrane VAV Units 20–21
Bypass Damper Operation 22
Building Pressure Control 23
Application Tip Summary 24

Selection Procedures 25–29

VariTrac Dampers 25–26
Model Number Description 27
Service Model Numbers 28
Typical Bill of Materials 29

Control and Electrical Data and Connections 30–35

Specifications 36–39

Acoustics 40–41

Dimensions and Weights 42–47

Glossary 48–49

™ ® The following are trademarks or registered trademarks of their respective companies: Precedent, ReliaTel, Trace, Tracker, VariTrac, VariTrane, Voyager.

Introduction

Comfort Made Simple

Trane has a long history of innovative leadership in variable air volume (VAV) technology. Trane introduced the:

- first fan-powered VAV unit
- first factory-commissioned DDC controller
- first preprogrammed VAV controller designed specifically for VAV applications

Trane is now the leading manufacturer of VAV terminal units and VAV-related products in the world.

The introduction of VariTrac™ in 1989 brought VAV controls expertise into the changeover bypass zoning market.

Trane is committed to continuous product improvement and now introduces a new generation of VariTrac controls. This latest generation retains the functionality of the original VariTrac system with exciting new enhancements, utilizing the best of today's technology.

Figure 1. The VariTrac CCP maximizes system efficiency and reliability by coordinating the components of the changeover-bypass system

The Changeover Bypass VAV Comfort Advantage

Packaged unitary systems offer a popular and cost-effective method of supplying conditioned air to light commercial buildings. These systems commonly have a constant-volume fan with a fixed outside air damper and a single thermostat. While a constant volume system may meet the overall thermal requirements of the space, only a single thermostat is available. This system may be insufficient in multiple-space applications with independent thermal load requirements.

Changeover bypass systems use the practicality and cost effectiveness of constant volume unitary components like packaged rooftop units, split systems, or water-source heat pumps, and simply add dampers and a central control panel to coordinate the components. This allows up to 24 individual sensors (thermostats) for independent temperature control.

Figure 2. The VariTrac CCP with optional touch-screen interface simplifies system operation with intuitive icon-driven design

VariTrac Product Enhancements

Selected enhancements of the new VariTrac product are listed below.

- A new central control panel (CCP) with improved system temperature and pressure control functions
- An optional touch-screen operator display for the CCP with built-in time clock for easier system setup and control
- A communicating bypass controller allows duct pressure and duct temperature to communicate to the system via a twisted shielded wire pair, thus eliminating costly "home-run" wiring
- The next generation UCM zone controller allows CO_2 and occupancy sensor inputs
- A digital display zone sensor for simplified occupant control

Advanced Control Options

Some of the VariTrac intelligent system control features are listed below.

- CO_2-based demand control ventilation resets the position of the HVAC unit ventilation air damper when zone CO_2 levels rise
- Zone-based HVAC unit control operates heating and cooling only when zone demand exists
- Discharge air control to avoid extreme supply air conditions and maximize equipment life and occupant comfort
- A simplified system-balancing process is available via PC software or the touch-screen interface
- Global zone temperature setpoint limits simplify startup, commissioning, and operator control

Features and Benefits

Figure 3. VariTrac changeover-bypass VAV system components

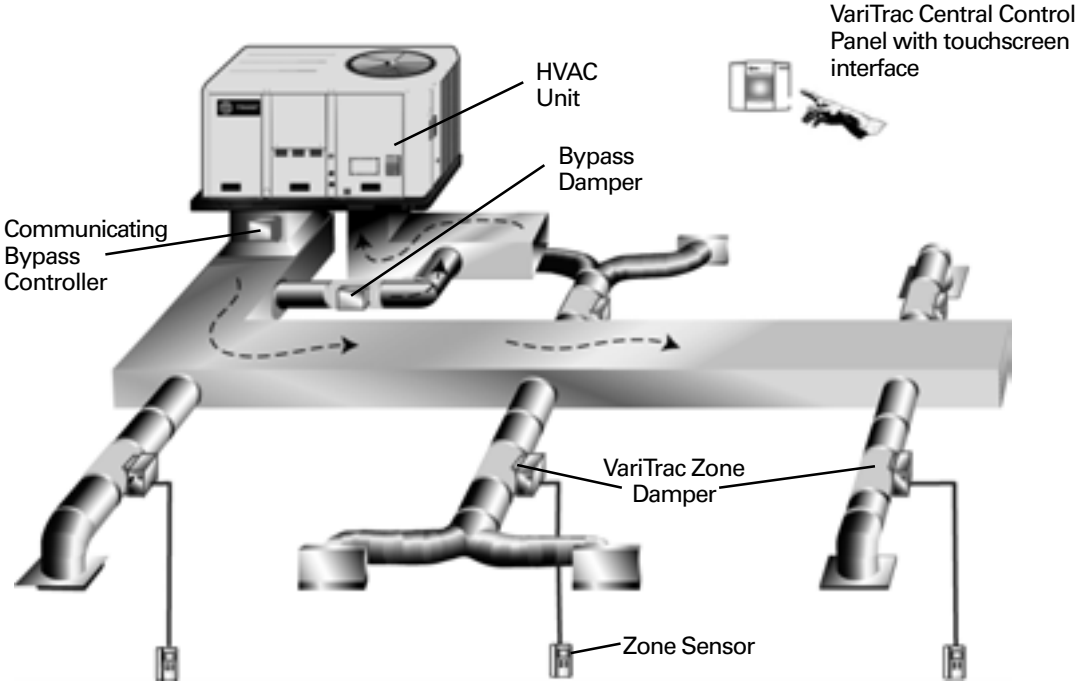

VariTrac Central Control Panel (CCP)
The CCP is the system level controller which coordinates and monitors VariTrac system operation, including HVAC system supply pressure and airflow, heating/cooling mode, supply air temperature, all zone temperatures and setpoints, fan mode, economizer position (when paired with CO_2 demand controlled ventilation), time-of-day scheduling, zone grouping logic, system override mode (after hours operation), and much more.

Rooftop

Split System

WSHP

HVAC Unit
VariTrac changeover bypass systems operate with Trane and non-Trane products, including split systems, packaged rooftop units, and water-source heat pumps. These systems are generically referred to as HVAC (heating, ventilating, and air conditioning) units. When combined with a Trane packaged rooftop with ReliaTel™ controller, wiring, installation, and system startup efficiency is maximized by connecting with a simple twisted shielded wire pair.

Bypass Damper w/ Wire and Quick Connect
A round or rectangular damper ducted between the HVAC supply and return ducts. It is easily connected via a "quick-connector" which provides quick and consistent field wiring. The bypass damper is modulated by the CCP to maintain required system static pressure.

Communicating Bypass Controller
A single enclosure with duct temperature sensor, static pressure sensor, and communicating controller (UCM) which easily mounts on the supply ductwork. The UCM provides power to drive the bypass damper actuator.

Zone Sensor
Zone sensors (sometimes referred to as thermostats) measure space temperature and report it to the zone damper controller (UCM). Five models are available to satisfy varied aesthetic and application preferences.

Features and Benefits

Overview

Changeover-bypass VAV is a comfort system developed for light commercial applications. A changeover-bypass VAV system responds to changing cooling or heating requirements by varying the quantity or volume of air delivered to each zone. Each zone has a thermostat for individual comfort control. An HVAC unit delivers a constant volume of air to the system. As the volume of air required by the zone changes, excess supply air is directed to the return duct via a bypass duct and damper. (See Figure 3 for typical system components.)

A changeover-bypass VAV system combines the comfort benefits of VAV with the cost effectiveness and simplicity of packaged, constant-volume unitary equipment.

How the System Works

A changeover-bypass VAV system commonly consists of an HVAC unit with a constant-volume supply fan, and direct-expansion (DX) cooling. This combined system has the ability to "change" to the heating mode or cooling mode, depending on individual zone comfort requirements. A heating coil or a gas-fired heater and an outside air damper are possible options.

A temperature sensor in each zone communicates information to an electronic controller on the VAV terminal unit. The controller then modulates the zone damper open or closed, supplying heating or cooling air to the zone.

The HVAC unit delivers a constant volume of supply air to the system. In order to maintain duct static pressure, a bypass duct and damper are required to bypass (detour) air not required in the zones.

The VAV terminal unit controller communicates zone temperature information to a central control panel (CCP). The CCP also gathers information from the system, including duct static pressure and supply-air temperature. The CCP determines zone heating or cooling needs using voting (or polling) logic, then requests heating or cooling from the HVAC unit. The CCP directs the HVAC unit to provide ventilation air to high-occupancy areas (demand control ventilation) or free-cooling when the outside air temperature falls below the temperature setpoint (economizer control).

Auto Changeover

"Auto changeover" refers to the ability of the system to automatically change between the heating and cooling modes.

In a changeover-bypass VAV system, the CCP determines whether the HVAC unit should heat or cool by polling the temperature of the individual zones. It then compares the zone temperatures to the space temperature setpoints. If the supply air does not meet the criteria for the heat or cool mode called for, the CCP sends a signal to the HVAC unit to change the system to the opposite mode.

Features and Benefits

Central Control Panel

The VariTrac central control panel (CCP) serves as the central source of communications and decisionmaking between the individual zones and the HVAC unit. The CCP determines system heating and cooling modes and coordinates the system supply air temperature and static pressure to satisfy building thermal load conditions. Inputs to the CCP include 24VAC power and communication wiring to the zone dampers and bypass control.

Binary inputs consist of priority shutdown and occupied/unoccupied modes. Heating, cooling, and the HVAC unit fan on split systems and non-Trane HVAC units can be controlled through binary outputs on an accessory relay board. If a Trane rooftop air conditioner with factory-installed electronic controls is used, the CCP can control heating, cooling, and the fan with a two-wire communication link tied to an interface board mounted in the rooftop. It can also display status information from the electronic controller in the rooftop. (See Figure 4.)

Figure 4. A screen representation from the central control panel illustrating system status

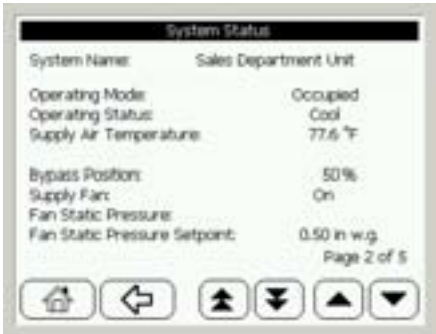

Figure 5. VariTrac central control panel

CCP Feature Summary

- Communicates with up to 24 VAV unit control modules (UCMs)
- Makes optimal heating and cooling decisions based on setpoint and temperature information received from individual zones
- Automatically calibrates all dampers, significantly reducing labor-intensive and costly field calibration
- Windows-based PC software simplifies setup and control
- Provides diagnostic information for all system components via the operator display or PC software
- Provides status and diagnostic information for Trane HVAC units equipped with Trane ReliaTel or UCP electronic controls

Figure 6. VariTrac central control panel with optional operator display

Optional Operator Display

The optional operator display is a backlit, liquid crystal display with touch-screen programming capability.

The operator can access system and zone status through the display and perform basic setup of zone VAV UCMs and CCP system operating parameters. The display allows an installer to commission a VariTrac system without using a PC. The operator display has a seven-day time clock for stand-alone scheduling capability.

Operator Display Feature Summary

- Backlit LCD touch-screen display for easy operator interface
- Combination of icon- and menu-based navigation provides intuitive operation
- Provides a level of control for the daily operator, and a second level for commissioning and service
- Three levels of security are available to protect system settings
- Seven-day time clock for stand-alone, time-of-day scheduling

Features and Benefits

Communicating Bypass Controller

The communicating bypass controller is a single control enclosure with the following integrated devices included:

- integrated UCM board
- static pressure sensor
- discharge air temperature sensor

The communicating bypass controller directly controls the bypass damper and communicates duct conditions to the central control panel via a simple twisted shielded wire pair.

Quick Connect

Minimizes field wiring labor and assures wiring consistency

Duct Temperature Sensor

The supply air temperature sensor allows the CCP to control heating and cooling stages to maintain the supply air temperature. Supply air temperature setpoints can be edited through the operator display or PC software.

Static Pressure Sensor

The static pressure sensor measures duct static pressure and positions the bypass damper(s) to maintain the static pressure setpoint.

Figure 7. Communicating bypass controller side view and 3-D view

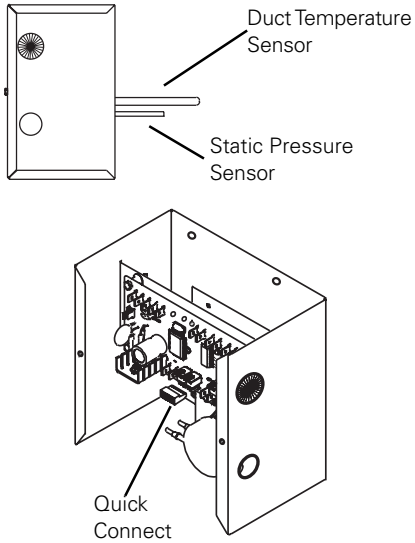

Tracker System Integration

The VariTrac system can be fully integrated with the new family of Tracker building controls. A Tracker building management system can manage multiple VariTrac systems from a single control point.

Tracker System Summary

- Controls up to 10 VariTrac systems from a single Tracker panel for easy building operation
- LCD touch-screen operator display or Tracker PC software interface provides single-point building management by a local operator
- 365-day scheduling function and the flexibility of up to 10 schedules
- Assign all systems to a single schedule, if desired, for simplified schedule changes
- Exception scheduling feature for easy management of vacations and holidays
- Automatically adjusts for daylight savings time and leap year
- Remote communications capability via modem for system programming and control

Figure 8. Tracker System Architecture

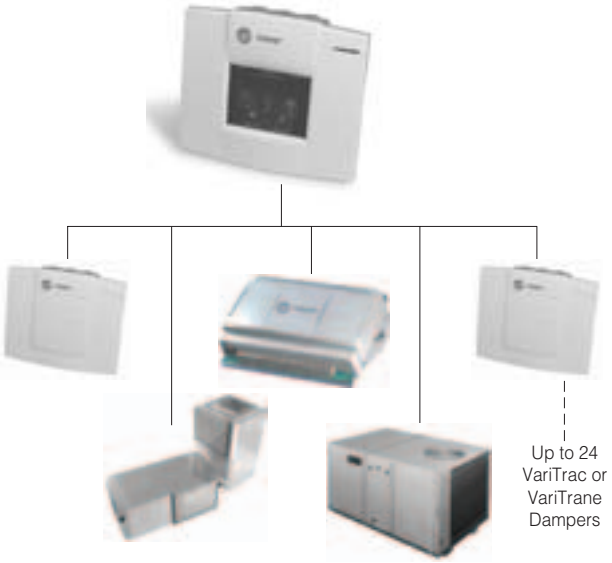

Features and Benefits

VariTrac Bypass Dampers

Bypass dampers are non-communicating VariTrac dampers and include an integrated fully-modulating 24 VAC electric actuator.

Field wiring errors are reduced with a quick-connect harness that plugs into the communicating bypass controller.

Dampers are nominally rated up to 1800–2400 fpm at 1.75" of static pressure, depending on size.

For damper performance information, see Table 2.

Round Bypass Damper Summary

- Round bypass dampers are available with inlet diameters 6, 8, 10, or 12 inches
- Heavy gage galvanized steel cylinder with rolled bend for high structural integrity and corrosive resistance
- Metal-to-metal blade seal provides tight shutoff for low leakage
- Aerodynamic blade design provides a constant torque for stable operation at high velocity
- Factory-installed, direct-coupled, fully-modulating 24 VAC actuator
- Rated up to 2400 fpm at 1.75" of static pressure

Rectangular Bypass Damper Summary

- Rectangular bypass dampers are available in sizes 14 x 12, 16 x 16, 20 x 20, and 30 x 20 inches
- Formed heavy gage galvanized steel frame, mechanically joined with linkage concealed in the side channel
- Air linkage is minimized with an opposed blade design with stainless steel side seals
- Damper casing is 16 inches long and constructed of heavy gage galvanized sheet metal with *S* cleats on the inlet and outlet for easy installation
- Blades are six-inch nominal width, heavy gage galvanized steel
- A blade rotation stop feature prevents over-rotation of the blades in the fully open position
- Factory-installed, direct-coupled, fully-modulating 24 VAC actuator
- Rated up to 3000 fpm at 2" of static pressure

Features and Benefits

VariTrac Zone Dampers

VariTrac zone dampers are fully-modulating, pressure-dependent VAV devices. The dampers control zone temperature by varying the volume of air flowing into a space. Each VariTrac damper has a control box with a VAV control board and actuator enclosed. The dampers are designed to operate in static pressures up to 1.75 in. wg.

Round Zone Damper

- Round dampers are available in 6, 8, 10, 12, 14, and 16 inch diameters
- Heavy gage galvanized steel cylinder with rolled bend for high structural integrity and corrosive resistance
- Metal-to-metal seal provides tight shutoff
- 90° blade rotation for a wide control range and stable operation
- Aerodynamic blade design provides constant torque for stable operation at high velocity
- Rated up to 2000 fpm at 1.75" of static pressure

Rectangular Zone Damper

- Rectangular dampers are available in sizes 8 x 12, 8 x 14, 8 x 16, 10 x 16, 10 x 20, and 14 x 18 inches
- Heavy gage G90 galvanized steel frame assembled by a mechanical joining process
- Single-ply, heavy gage G90 galvanized steel blades
- Linkage has high impact ABS gears, and is 3" nominal diameter
- Factory-installed 24 VAC direct-coupled actuator
- Rated up to 2400 fpm at 2" of static pressure

Unit Control Module

A unit control module (UCM) is the individual zone controller for the VariTrac air damper and is mounted on each zone damper. The unit controller continually monitors the zone temperature to maintain space temperature. The UCM varies the damper position as needed to meet zone setpoints and communicates current space requirements and system operating modes to the CCP.

The UCM can also control local heat. Local heat may be duct- or space-mounted, and can be staged electric, pulse-width modulating electric, and modulating or two-position staged hot water.

Figure 9. VariTrac rectangular and round zone dampers with UCMs

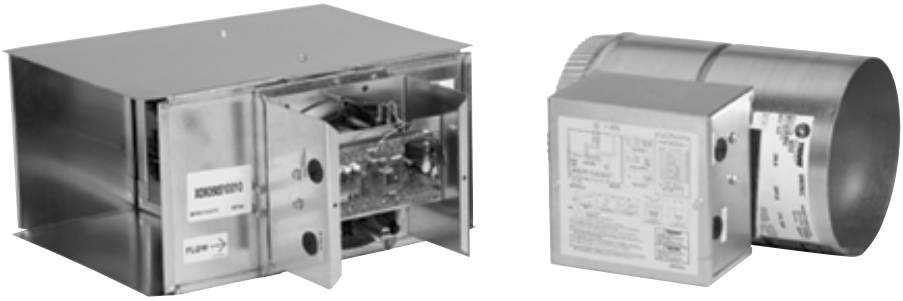

Features and Benefits

Zone Sensors

Figure 10. DDC zone sensors

Figure 11. DDC zone sensor with LCD

DDC Zone Sensor

The direct digital control (DDC) zone sensor is an uncomplicated, reliable electro-mechanical room sensor. No programming is required and most sensors contain an internal communications jack.

Models are available with combinations of features such as override (on-cancel) buttons and space-mounted setpoint.

Four sensor variations are available:

- Sensor only (no communications jack)
- Sensor with override buttons
- Sensor with temperature setpoint only
- Sensor with temperature setpoint and override buttons

DDC Zone Sensor with LCD

The DDC zone sensor with LCD (liquid crystal display or digital) is compatible with VariTrane VAV and VariTrac controllers.

Digital Zone Sensor Summary

- Displays setpoint adjustment and space temperature in °F or °C
- Simple, two-button control of space setpoint
- Setpoint control and room temperature display can be optionally disabled
- Includes button for timed override and a cancel feature for after-hours system operation
- An easily accessible communications jack is provided for Trane portable edit terminal devices
- Nonvolatile memory stores last programmed setpoints
- For field balancing, maximum and minimum airflow or position can be overridden from the sensor

Features and Benefits

Figure 12. Wall-mounted CO_2 sensor

Figure 13. Duct-mounted CO_2 sensor

CO_2 Sensor

Wall- and duct-mounted carbon dioxide (CO_2) sensors are designed for demand-controlled ventilation zone applications. The sensor is compatible with VariTrane VAV and VariTrac controllers. The Trane CO_2 sensors measure carbon dioxide in parts-per-million (ppm) in occupied building spaces. Carbon dioxide measurements are used to identify under-ventilated building zones. Outdoor airflow increases beyond design ventilation rates if the CO_2 exceeds specified levels.

CO_2 Zone Sensor Summary

- Use with the UCM CO_2 input for demand control ventilation
- Silicone-based NDIR sensor technology for long-term stability
- Measurement range of 2000 ppm CO_2 input with an output of 0–10 Vdc
- Wall-mount transmitter is compact and aesthetic in appearance
- Optional zone return duct-mount transmitter is available

Figure 14. Zone occupancy sensor

Zone Occupancy Sensor

The energy-saving zone occupancy sensor is ideal for zones having intermittent use during the occupied mode. The sensor sends a signal to the VAV controller upon detection of movement in the coverage area. The VAV system then changes the zone from occupied standby mode to occupied mode.

Occupancy Zone Sensor Summary

- Compatible with VariTrane VAV and VariTrac controllers
- Used with zone damper UCM for controlling the occupied standby function
- Ceiling-mount PIR occupancy sensor detects motion over an adjustable range up to 360 degrees
- Single detector covers up to 1200 square feet. For areas larger than 1200 square feet, multiple sensors can be wired in parallel
- Adjustable time delay avoids nuisance change of state on loss of detection
- Adjustable sensitivity
- SPDT isolated contacts connect to UCM input

Figure 15. Auxiliary temperature sensor

Auxiliary Temperature Sensor

The auxiliary temperature sensor is used with any UCM damper control. The sensor allows the operator to monitor duct temperature or air temperature leaving a reheat device at the zone damper. This sensor is used for automatic changeover of a UCM damper when not using a CCP. The auxiliary temperature sensor is ideal for remote monitoring and diagnostics from the CCP operator display.

Auxiliary Temperature Sensor Summary

- Thermistor sensing element 10,000 Ohms @ 77°F
- Wiring connection 8 feet, 18 awg
- Sleeving for wire leads is acrylic #5 awg grade C rated @ 155C

Application Considerations

Introduction

The VariTrac system is a changeover-bypass VAV system. One fan supplies either warm air for heating or cool air for cooling. It is typically applied in small buildings which use unitary heating/cooling air conditioners. These buildings need the simplicity and low cost of unitary equipment, but more than one comfort control zone (one zone temperature sensor) for each air conditioner.

When is VariTrac a good HVAC system choice? To help answer this question, several important application concepts and considerations are discussed below.

Figure 16. System design affects occupancy comfort

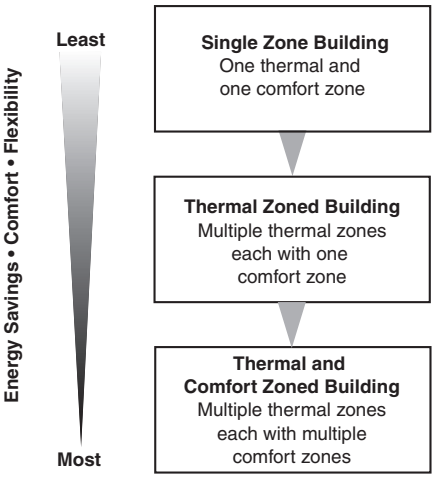

Zoning Considerations

Consider the following two questions when evaluating your HVAC system design:

Will the building occupants be comfortable? A system designed with a single-zone HVAC unit and one zone sensor provides comfort to occupants near the zone sensor. However, occupants in perimeter areas or interior rooms may be too hot or too cold.

Will comfort be consistent from room to room and area by area? A building is normally divided into thermal zones for increased comfort control and energy savings. Each thermal zone should have a dedicated HVAC unit. For optimum comfort, each thermal zone should be further divided into comfort zones.

Choosing the number and location of thermal and comfort zones is critical in planning an effective system. Some things to consider in the design process include:

- Geographic location
- Orientation of the building to the sun
- Prevailing winds
- Wall construction (glass, insulation, building materials)
- Building layout, design, occupancy and occupancy pattern throughout the day and year
- Activities in each zone

Zoned unitary systems, such as changeover-bypass VAV, divide thermal zones into smaller comfort zones. Each comfort zone has a damper and zone sensor that controls the amount of heated or cooled air delivered to the zone. A central system controller monitors the status of each zone damper and zone sensor. The controller then makes the decision to heat or cool for the HVAC unit.

Individual comfort zones served by a common HVAC unit (part of the same thermal zone) can require heating and cooling at the same time. In a changeover-bypass VAV system, the unit alternately provides warm and cool air in an attempt to satisfy the needs of all comfort zones. This is effective if the simultaneous calls for heating and cooling exist for short time periods only. Wide temperature variations may occur if some comfort zones need heating for extended periods of time while others need cooling.

Some comfort zones require special consideration because of their use or location. An example is the foyer or reception area of an office building. These areas often have wide variations in thermal load because of glass (relative to other areas of the building) and frequently-opened exterior doors. Another example is an interior storage room with the need for ventilation but little or no heating or cooling. These zones can significantly influence efficient operation and comfort levels throughout the building.

Preferably, areas such as these are designed as separate thermal zones with dedicated HVAC units. However, this may be impractical or costly. Instead, use fan-powered variable-volume terminal units, or units with local reheat.

Application Considerations

Figure 17. Design process steps

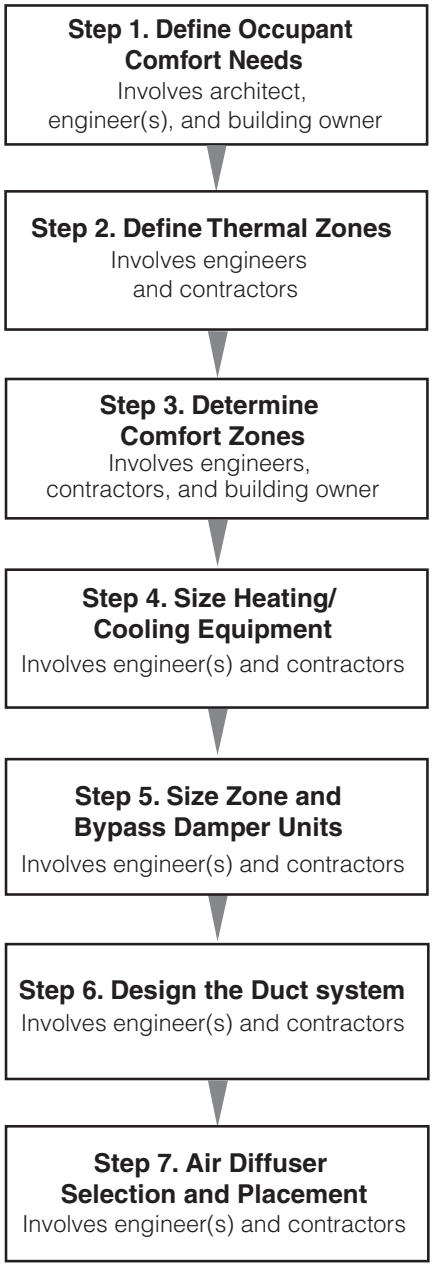

Effective Changeover Bypass VAV System Design

Unitary zoning systems feature low first cost and quick, easy system design and equipment selection. The system is simple, but it is essential that key elements are considered during the design process.

This section offers a system design sequence and discusses application considerations that, when followed, help avoid system control and operational instabilities.

Suggested design steps for unitary zoning systems are summarized in Figure 17.

Step 1. Define occupant comfort needs

The design process begins by considering the needs of building occupants and intended building use.

- **What is the intended use of the building?** Is the building usage primarily office space? Is there a manufacturing operation? Are there areas that have special requirements such as computer or electronic rooms, video/television production, training facilities, etc.?
- **What physical activity level is expected of the occupants?** Seated occupants require different indoor temperatures for comfort than continuously moving occupants. An example may be a building with a mix of office space and light assembly or manufacturing.
- **Where will the occupants be located and at what times?** Pay particular attention to areas with intermittent use, such as conference, training, and lunchrooms.
- **How are the occupants expected to dress?** Give consideration to how the building occupants will dress. Will they dress in traditional business attire, such as long-sleeved shirts or blouses, ties, and jackets? Or, will they dress in cooler, casual attire, such as golf shirts, light slacks, skirts, or shorts?

Gather as much usage information as possible before designing a system. This can be challenging, particularly when finishing out tenant spaces. However, usage information is crucial to the selection of heating and cooling equipment, building zoning, and duct layout.

Several publications provide guidance for properly assessing indoor space comfort. An example is ASHRAE (American Society of Heating, Refrigerating and Air Conditioning Engineers) Standard 55, Thermal Environmental Conditions for Human Occupancy. This standard specifies the combinations of indoor space environments and personal factors (activity and clothing) that will produce thermal environmental conditions acceptable to 80 percent or more of the occupants within a space. Standard 55 addresses temperature, thermal radiation, humidity, and air speed.

ASHRAE Standard 62, Ventilation for Acceptable Indoor Air Quality, is another source for occupant comfort and safety issues regarding indoor air quality. The standard recommends that relative humidity be maintained between 30 and 60 percent. This maximizes comfort and reduces the potential for microbial growth.

Step 2. Define the Thermal Zones

A thermal zone is an area with similar load profiles and occupant comfort requirements. A thermal zone can be a single room, an area, a group of rooms or an entire building. Defining the thermal zones within a building is crucial to designing a comfortable indoor environment. Each thermal zone is conditioned by a single heating and/or cooling unit. The load of the thermal zone determines the size of the heating and cooling unit.

Application Considerations

Cost vs. Comfort

First cost can be reduced by limiting the number of thermal zones. Unfortunately, this may impact the thermal flexibility of the system, and result in zone comfort issues. Let's take a closer look at this important system decision known as "thermal zoning."

Characteristics of a building which can influence thermal load are:

- Orientation of the building (North, South, East, West)
- Amount and thermal resistance (R-value) of glass (walls, skylights, etc.)
- Expected occupancy within the area
- Interior partitions and doors
- Varying loads from equipment or processes

Let's examine a few building examples and discuss the zoning criteria of each.

Building Example 1 *(See Figure 18.)*

Consider an existing single-story office building which is small, poorly insulated, with many large windows and few interior partitions. On a clear, cool spring day, the entire building is cool in the morning so heating is required. By afternoon, however, the south side of the building being influenced by the solar load, is warm and requires cooling. The north side remains shaded and continues to require heating. This situation results in a simultaneous requirement for heating and cooling for extended periods. Due to the varying loads throughout the building, controlling the building as a single thermal zone (with a single HVAC unit) cannot satisfy the comfort needs of all areas. It also is not a good candidate for a zoning system because of the simultaneous need for heating and cooling.

A similar building with good insulation and fewer shaded windows, on the other hand, may be a good candidate for a single thermal zone with individual comfort zones. The reduction in wall glass reduces the solar effect on the building resulting in all areas of the building having similar load profiles throughout the day. In this case, the building has a single thermal zone and is a good candidate for one HVAC unit. Individual comfort zones (zone dampers) will be needed to assure comfortable conditions throughout the zone.

Figure 18. *Building Example 1* illustrates a small, poorly insulated office on the left, and improved design on the right.

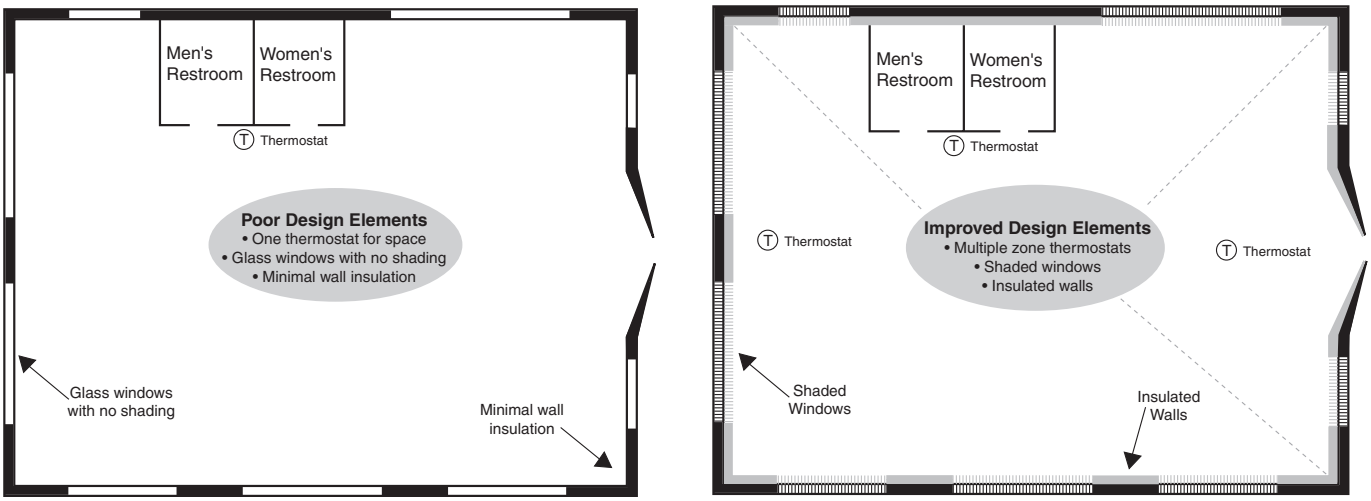

Building Example 2 *(See Figure 19.)*

Consider a strip mall in the spring or fall with stores that face both east and west. In the morning, the east side of the building gets full sun and warms up while the west side is shaded and requires heating. In the afternoon, the east side of the building may need heat and the west side cooling. Because of the thermal load variation throughout the day, this building will not remain comfortable if designed with a single heating and cooling unit.

On the other hand, comfort in this building could be improved by dividing the building into two thermal zones (two HVAC units), one serving the east exposure and the other serving the west. Even with the two systems, individual occupant comfort is not necessarily assured. Interior partitioning, varying schedules and number of occupants within the thermal zone will drive differing amounts of heating and cooling. The issues related to comfort zoning are addressed in the next section.

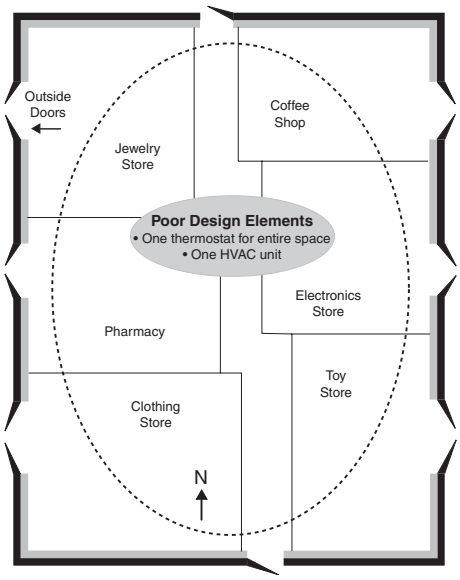

Figure 19. *Building Example 2* illustrates a poorly insulated store design (above) and an improved design (below)

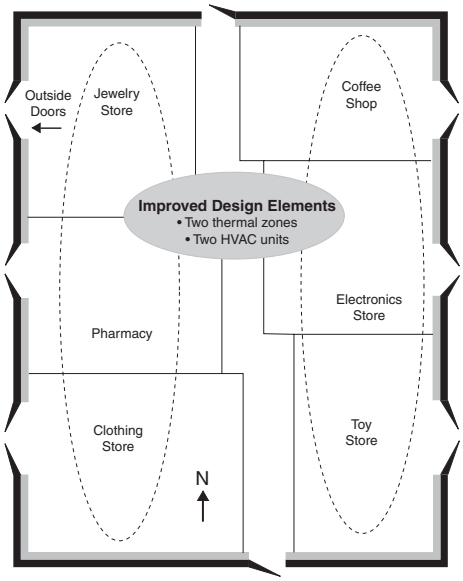

Step 3. Define the Comfort Zones

A primary criteria for defining a thermal zone is that it will not require simultaneous heating and cooling. An HVAC unit with one fan is limited to supplying either heating or cooling. Most applications with larger thermal zones however will have varying thermal needs throughout the zone. These small variations can easily be addressed by properly defining comfort zones.

A comfort zone is an area within a thermal zone that is controlled by a zone damper. The amount of conditioned (heated or cooled) air entering the space varies. This is in response to a space thermostat. ASHRAE Standard 55 recommends limiting indoor temperature variations. Temperature variations of less than 2°F in 15 minutes or 4°F in an hour. Deviations from this recommendation will cause discomfort in 80 percent of the occupants. Zoning systems can greatly reduce temperature variations caused by shifting occupancy and solar load conditions in large thermal zones.

Application Considerations

Step 4. Sizing HVAC Equipment

Once the building heating and cooling loads are known and the thermal zones have been determined, the heating and cooling equipment can be selected. Each thermal zone requires a separate heating and cooling unit. As discussed earlier, unitary zoning systems typically use packaged DX rooftop units or DX split systems. These systems are offered as heating and cooling units or heat pumps.

When selecting the heating and cooling unit for a thermal zone, load diversity within the zone should be considered to minimize equipment size and therefore reduce system first cost and operating expense. Load diversity is defined as the ratio of the instantaneous peak loads (block load) to the sum of the peak loads within the thermal zone. In recognizing load diversity, the designer acknowledges that all areas of the thermal zone will not require maximum cooling or heating at the same time.

While using diversity may reduce the size of the HVAC unit, the zone ductwork, dampers, and diffusers must be sized for the individual zone peak loads. The main trunk duct may be sized based on the HVAC unit airflow.

Calculating thermal zone diversity:

1. Determine the instantaneous peak (or block) load for the thermal zone. This information is output from load analysis software such as Trane TRACE® or manually calculated.
2. Calculate the sum of the peak loads for each of the comfort zones within the thermal zone.
3. The diversity factor is then calculated by dividing the instantaneous peak load value by the sum of the peak loads.

$$\text{Diversity Factor} = \frac{\text{Instantaneous Peak Load}}{\text{Sum of Peaks}}$$

The heating and cooling equipment will never be called upon to provide more capacity than was determined by the instantaneous peak load value. Consequently, the equipment capacity can be reduced by the diversity factor.

Table 1. Diversity example

Zone	Time	Peak Load
Interior	3 p.m. in mid-July	7.5 tons
North	5 p.m. in mid-July	3.0 tons
East	9 a.m. in June	2.5 tons
South	4 p.m. in November	4.0 tons
West	5 p.m. in September	2.5 tons
	Sum of Peak Loads	**19.5 tons**

Note: The sum of blocks loads = 17.5 tons and occurs at 5 p.m. in mid-July.

$$\text{Diversity} = \frac{17.5}{19.5} = 90\%$$

Figure 20. Diversity example

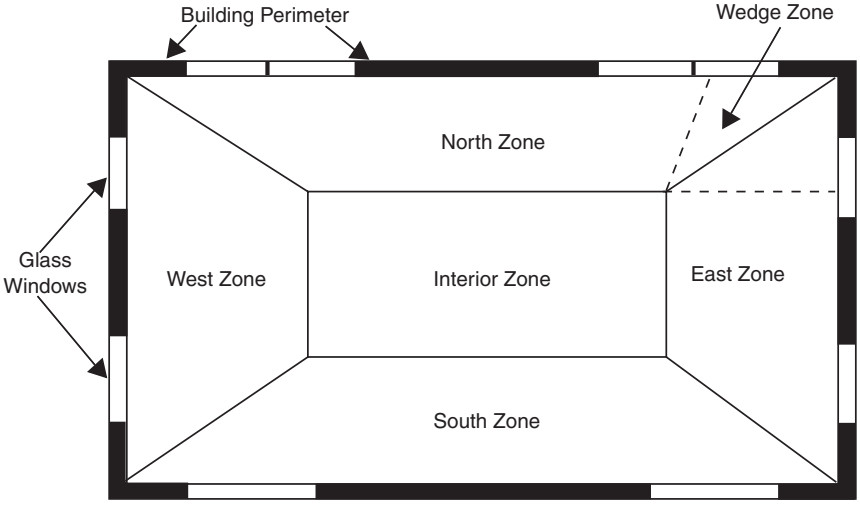

Application Considerations

Step 5. Size Zone and Bypass Damper Units

Sizing zone damper is relatively straightforward. The volume of airflow (in cfm or L/s) for each comfort zone should be known from the load analysis. The designer must select the duct velocity to be used for the system. Recommended zone damper velocities are 1000 to 1600 feet per minute (fpm) when applied at the branch level. Sizing dampers in this range will minimize damper cost, reduce the risk of excessive noise, and ensure adequate zone modulation/temperature control.

Dampers located immediately adjacent to the zone or diffuser may need to be sized at a lower velocity to avoid sound and airflow delivery issues.

Bypass dampers are typically sized for 80 percent of HVAC unit airflow. Recommended velocities are 1600 to 2000 fpm. Bypass dampers should be located as close to the HVAC unit as possible. (See Bypass Damper Operation for additional details.)

Note: VariTrac systems are designed for HVAC unit static pressures up to 1.75" w.c.

Figure 21. Hand balancing dampers

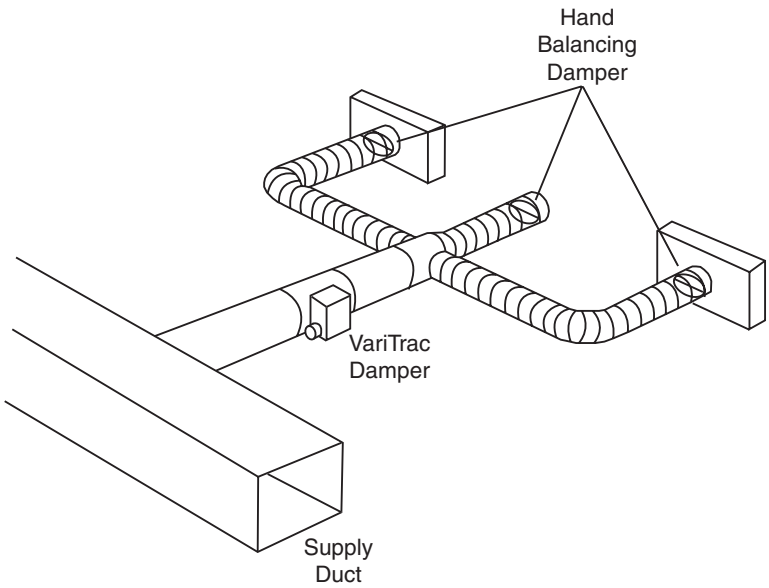

Step 6. Designing the Duct System

Low pressure, low velocity air distribution systems, such as zoned unitary systems, are usually designed using the equal friction method. Although static regain is the duct design method of choice for medium and high velocity variable air volume systems, the added complexity is difficult to justify with smaller unitary systems. In addition, the low operating velocity of most unitary systems makes the pressure available to "regain", small and inconsequential.

With the equal friction method, ducts are sized for a constant pressure loss per given length of duct and fitting(s). Where low noise levels are especially critical, the system velocity can be reduced by enlarging the entering and leaving ductwork, damper unit or adding duct liner. A characteristic of the equal friction method that must be considered however, is that there is no natural provision for equalizing pressure drops in the branch sections. This results in each branch duct, and thus the damper units, having different entering static pressure and airflow characteristics.

A robust system and zone unit controller, like the Trane VariTrac system, will compensate for system static changes. The use of manual (or hand) balancing dampers in the branches will also ensure that airflow is appropriately distributed to each diffuser. (See Figure 21.) The overall effect is improved acoustical and system performance.

Application Considerations

Step 7. Air Diffuser Selection and Placement

Supply Diffusers

Many types of supply air diffusers are used in variable air volume systems. Performance, and ultimately space comfort, can vary greatly depending on the diffuser selected. Although constant-volume diffusers will provide air to the space at full cfm, as air volume delivered to the space decreases, so does performance. Linear slot diffusers are recommended for most VAV systems.

Linear supply air slot diffusers are designed to properly mix variable air delivery of both heated and cooled air. Linear slot diffusers supply conditioned air which "hugs" the ceiling rather than "dumps" air downward on the occupants. This airflow characteristic is known as the "coanda effect." The throw and aspiration characteristics of slot diffusers help to evenly distribute the air throughout the room or space.

Locate linear slot diffusers in the center of the room with the discharge air pattern perpendicular to a perimeter wall. To maximize diffuser performance, placement in which air discharge patterns converge at right angles should be avoided. (See Diffuser section of the VariTrane catalog (VAV-PRC008-EN) for additional diffuser placement and performance recommendations.)

The throw characteristics of diffusers is well-documented. Slot diffusers should be positioned so that the velocity of the air striking an obstruction (such as a wall or column) is 75 feet per minute (fpm) or less. If airstreams from two diffusers collide, the collision velocity should not exceed 150 fpm. Higher collision velocities result in uncomfortable drafts in the lower levels of the room.

In heating applications, linear slot diffusers must be placed to offset heat loss and prevent downdraft problems along perimeter walls. The following techniques have been proven by test and experience:

- When the average glass plus wall heat loss is less than 250 Btuh/linear foot, the slot diffuser may be located in the center of the room with one or more slots blowing toward the perimeter wall.
- With glass and wall heat loss between 250 and 450 Btuh/linear foot, diffusers should be positioned to blow toward the window and the perimeter wall with a collision velocity of 75 to 150 fpm. If using a continuous glass design, position diffusers every four feet.
- If heat loss exceeds 450 Btuh/linear foot, radiation or floor mounted heated air will be required to offset the high wall heat loss.

Return Diffusers

Slot-style return diffusers offer some acoustical advantages over perforated grille styles. Perforated drop-in grilles typically offer little attenuation effect and thus allow sound in the plenum to break out into the occupied space. This is a problem in areas near the unitary heating and cooling unit. Improved ceiling aesthetics is also an advantage of slot return diffusers in jobs where slot supply diffusers are used. Within the occupied space, they blend with the slot supply diffusers.

A general rule of thumb is for the return air openings to equal the total area of the supply openings. If the ceiling is not tight, such as a drop-in ceiling, the return openings can be reduced by up to 50% of the supply air openings.

To promote good air distribution, return diffusers should be positioned to minimize supply air short-circuiting to the return slot. The returns should be either perpendicular to the supply airflow or parallel and offset from the supply diffusers.

Figure 22. Proper return diffuser orientation

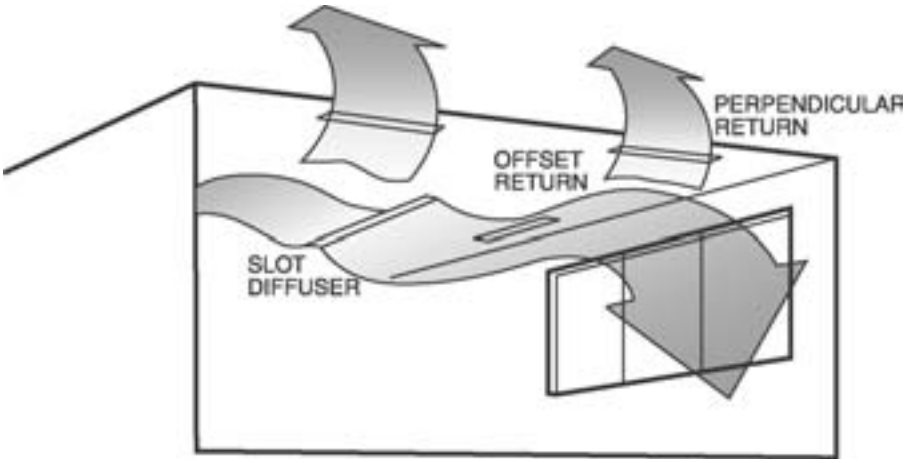

Application Considerations

Pressure Dependent vs. Pressure Independent

Pressure-Dependent

A pressure-dependent VAV control sequence uses the space temperature sensor to directly control the position of the zone damper. The actual airflow delivered to the space is a by-product of this damper position and the static pressure in the duct upstream of the zone damper.

Ventilation air is a fixed-damper position and must be measured and set during the commissioning process.

Pressure-Independent

A pressure-independent VAV control scheme directly controls the actual volume of primary air that flows to the space. An airflow-measuring device in the VAV terminal unit makes this possible. The position of the modulating device is not directly controlled and is a by-product of regulating the airflow through the unit. Because the airflow delivered to the space is directly controlled, it is independent of inlet static pressure.

Figure 23. Single-duct VAV unit is available with integral electric or hot water heat

Local Reheat Capabilities Using VariTrane VAV Units

VariTrane pressure independent VAV units are a simple way to upgrade the zone VAV capabilities on a VariTrac system. The main advantage is the ability to integrate units with either hot water or electric reheat. Here are application examples where VAV units may enhance your design:

Example 1

Series fan-powered VAV units work well in conference rooms and training rooms. Series fan-powered units supply constant air volume to the space. This provides excellent air movement in the space regardless of the internal load requirements. Hot water or electric heat are integral to the unit and optionally available to temper the air at partial load conditions.

Figure 24. Series fan-powered VAV terminal unit

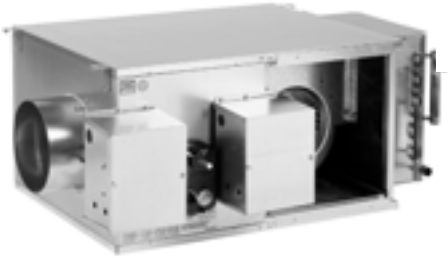

Example 2

Parallel fan powered units with local heat applied help solve problems in difficult areas to control like lobbies and vestibules. The parallel fan provides local heat to an individual zone without relying on the main HVAC unit's heat or supply fan. This allows greater flexibility for mixing zones on a VariTrac system.

VariTrane units with integral electric or hot water heat are available as:

- single-duct
- parallel fan-powered
- series fan-powered

Figure 25. Parallel fan-powered VAV terminal unit

Application Considerations

Local Reheat Capabilities Non-VAV Options

The Trane VariTrac Zone Controller has built-in capabilities and logic to control a number of reheat sources. The previous page discussed how a VariTrane VAV unit with reheat can solve application issues by providing local reheat.

Local Reheat

Let's investigate a few other alternatives which will provide local reheat, and result in exceptional zone temperature control.

Local reheat is particularly important when an HVAC unit is in cooling mode. Cold air is delivered to all zones whether it is needed or not. Setting the minimum cooling position to zero may not be practical based on ventilation and/or general airflow requirements. In this case, local reheat options which can be controlled by the standard VariTrac zone controller include:

- hydronic wall fin or convector unit with either modulating or two position control. (See trane.com for a full line of wall fin and convector products.)
- electric wall fin with multi-stage control
- duct-mounted electric heater with multi-stage control
- duct-mounted hot water coil with either modulating or two-position control. (See trane.com for a full line of duct-mounted water coils.)

Figure 26. Trane hydronic wall fin

This is ideal for spaces with large windows or perimeter heat losses which exceed 450 Btuh per linear foot. Trane wallfin is available with various grilles and paint options and can be pedestal or wall-mounted

Figure 27. Trane electric wall fin

Application Considerations

Bypass Damper Operation

When zone dampers modulate airflow to the spaces, static pressure changes in the supply duct system. High pressure in a duct system creates excessive noise and causes poor comfort control. Low pressure results in insufficient airflow to the spaces.

The HVAC unit in a changeover bypass system is constant volume and does not modulate supply airflow. Changeover-bypass VAV systems support variable-air-volume operation in the zones by using a bypass duct with a motorized damper and a pressure-sensing device.

As duct pressure rises above the static pressure setpoint, the bypass damper begins to open. Conversely, when static pressure falls below the static pressure setpoint, the bypass damper begins to close until the static pressure setpoint is reached. The optimal static pressure setpoint is automatically determined upon system calibration.

Proper operation requires consideration of all aspects of bypass design and location. The bypass dampers and ductwork should be sized and located according to the following general recommendations:

- Avoid turbulence by locating the bypass two to three equivalent duct diameters downstream of the HVAC unit discharge.
- Locate the static pressure and supply air sensors in the main supply duct upstream of the bypass.
- Locate the bypass before the zone dampers (as close to the HVAC unit as possible) to avoid comfort or noise issues.
- Size the bypass damper to maintain the minimum required airflow through the HVAC unit (usually 80 percent of the total design cfm)
- Provide adequate access for servicing the damper.

Figure 28. Changeover bypass variable-air-volume system

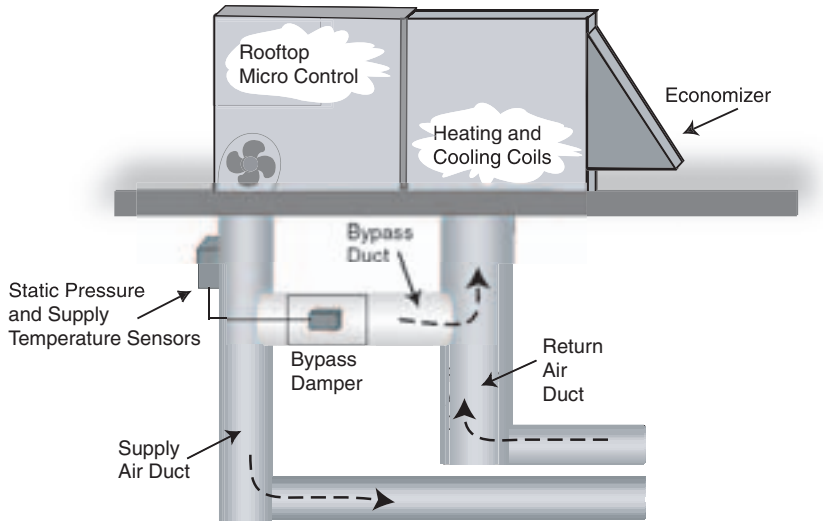

Application Considerations

Building Pressure Control

Comfortable, efficient building operation requires that the air pressure inside the building be slightly higher than the atmospheric pressure outside of the building. That is, the building is at a "positive" pressure with respect to the outside environment. If the indoor pressure is too low (negative), the doors may be hard to open and cold air may leak in through construction cracks, causing drafts and cold floors. On the other hand, if the indoor pressure is too high, the doors may stand open and the supply air flow to the zones may decrease, decreasing comfort.

Fixed Outside Air Dampers

Achieving appropriate building pressure is simple in a system with a constant volume supply fan and fixed outdoor air damper. To maintain a slightly positive building pressure, size the exhaust fans to remove slightly less air than is introduced through the outdoor air damper.

Outside Economizer or Demand-Controlled Ventilation Systems

If the system resets the quantity of outdoor air in response to occupancy demands (demand-controlled ventilation), or uses an outdoor air economizer, undesirable changes in building pressure may result. As the quantity of outdoor air intake varies, the system must exhaust a similar quantity of air to avoid over or under pressurizing the building.

When using an economizer in a changeover-bypass VAV system under low cooling load conditions (reduced airflow to the zones), the bypass damper opens to maintain the static pressure setpoint and airflow through the supply fan. As the outside air damper opens to provide economizer cooling, the return air damper closes. In buildings with a ceiling plenum return, the bypass air dumps into the ceiling plenum since it can no longer return to the fan. The plenum pressure rises and plenum air enters the zones through the return air grilles.

In buildings that have a ducted return to the fan, bypass air pressurizes the return air duct. As the return air duct pressure rises, the air flows out of the building through the barometric relief damper in the rooftop unit. Excess bypass air flows into the zones through the return air grilles.

Using the following suggestions will help maintain building pressurization control:

- Use an exhaust fan with a modulated exhaust damper to remove air from the return air plenum or duct. Energize the exhaust fan as the outside air damper opens beyond the minimum position. Sense building static and maintain building air pressure at a slightly positive level by modulating the exhaust damper position.
- Use an exhaust fan with no exhaust damper. Energize the exhaust fan when the outdoor air damper opens beyond 25 percent to remove excess outside air from the building. This method is used with some rooftop units and is effective, affordable, and easy to install.
- Use a back draft damper to prevent airflow to the return air plenum or grilles. When bypass airflow pressurizes the return duct, the back draft damper closes. Pressure in the HVAC unit return air inlet rises, causing the rooftop barometric relief damper to open. This method is less effective because the rooftop barometric relief damper is sized for a portion of the total airflow, not 100 percent of airflow which may be seen in economizer mode. As the economizer drives to the maximum position, the building usually becomes over-pressurized.

Figure 29. Changeover bypass with an economizer. Without proper building pressurization, bypass air may be forced out of the return duct.

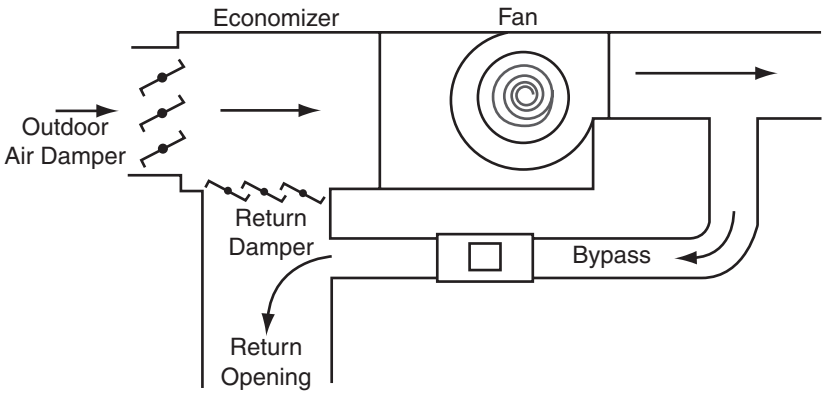

Application Considerations

Application Tip Summary

Tip 1. Use comfort zones

Units serving thermal zones can provide greater comfort by dividing the thermal zones into "comfort zones" using a changeover-bypass-VAV system.

Tip 2. Create thermal zones

Create thermal zones which minimize simultaneous heating and cooling requirements. This will avoid unnecessary changeover of the system and maximize comfort. As an example, a computer room would be a poor candidate for one comfort zone of a changeover-bypass-VAV system because it will rarely, if ever, require heating.

Tip 3. Use local heat

Zones which vary thermally by requiring more heat than the other zones or require heat when the HVAC unit is in cooling mode should use local heat. Local heat in the form of VariTrane VAV units with electric or hot water heat, or wallfin, or convectors, or duct-mounted coils. The standard VariTrac controller is capable of controlling the heat based on zone temperature demands.

Tip 4. Place dampers properly

The bypass damper should be ducted between the supply and the return of the unit as close to the unit as possible, and should be sized to handle 80% of the total system CFM.

Tip 5. Control building pressure

It may be necessary to provide a modulating means to control building pressure, especially when economizers or demand-controlled ventilation are used in conjunction with a changeover-bypass-VAV system.

Tip 6. Use fan-powered VAV boxes

Consider using fan-powered VAV boxes to provide local heat or to enhance comfort levels in some of your zones. Conference rooms, or zones with high wall heat loss are ideal for either series or parallel units.

Selection Procedures

VariTrac Dampers

VariTrac dampers are typically installed on VariTrac changeover bypass variable air volume (VAV) systems. VariTrac is ideal when applied to buildings which use unitary HVAC units. The damper units have controls, which vary air volume and maintain appropriate duct static pressure in the system to make sure that all zones receive the right amount of airflow.

Trane offers four VariTrac dampers:

- Round zone dampers with DDC controls
- Rectangular zone dampers with DDC controls
- Round bypass dampers
- Rectangular bypass dampers

Figure 30. Round and rectangular zone and bypass dampers

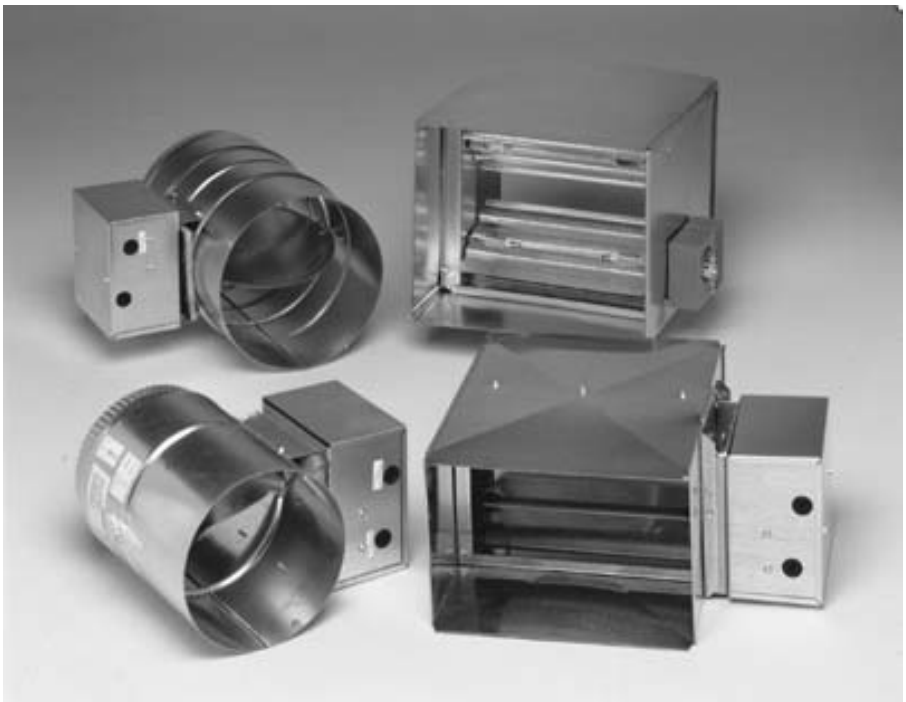

Zone Damper Selection Procedures

Refer to the sizing chart in Table 2 for zone dampers. Follow down the first column in the table for the desired velocity. Then follow across for the cfm (air volume) of a given VariTrac damper based on that velocity.

Note: If the cfm exceeds the damper range, increase the damper size.

Minimum airflow damper position should be set to10 percent in heating or cooling when a zone duct temperature sensor is used for stand-alone control. In addition, when controlling duct-mounted electric reheat coils, cooling minimum airflow should meet the heating unit manufacturer's guidelines. (See Application Considerations, Maximum System Effectiveness for more details.)

Bypass Damper Selection Procedures

To determine the cfm capacity required for a bypass damper, calculate 80 percent of the cfm capacity of the heating/cooling unit.

Example: If the rooftop capacity is 1200 cfm, the bypass damper should be sized for 1200 x .8 = 960 cfm.

To determine the size of the damper, locate the recommended velocity and cfm for the bypass damper.

Since a 10" round bypass damper at 1800 fpm provides 980 cfm, a 10" damper at 960 cfm would be slightly less than 1800 fpm, but still within the 1600 to 2000 fpm recommended velocity. A 10" bypass damper is selected.

Selection Proceduress

Table 2. Damper sizing charts

Round Zone Damper
Capacity (cfm), Dimensions, and Weights

Size ►	6"	8"	10"	12"	14"	16"
Velocity (fpm) 600	120	210	330	470	640	840
800	160	280	435	630	855	1115
1000	200	350	545	785	1070	1395
1200	235	420	655	940	1280	1675
1400	275	490	765	1100	1500	1955
1600	315	560	875	1255	1710	2235
Length	12"	12"	16"	16"	20"	20"
Ship Wt	11 lbs	12 lbs	17 lbs	18 lbs	27 lbs	31 lbs

Recommended

Round Bypass Damper
Capacity (cfm), Dimensions, Blades, and Weights

Size ►	6"	8"	10"	12"
Velocity (fpm) 600	120	210	330	470
800	160	280	435	630
1000	200	350	545	785
1200	235	420	655	940
1400	275	490	765	1100
1600	315	560	875	1255
1800	350	630	980	1415
2000	390	700	1090	1570
Length	12"	12"	16"	16"
Ship Wt	11 lbs	12 lbs	17 lbs	18 lbs

Recommended

Rectangular Zone Damper
Capacity (cfm), Dimensions, Blades, and Weights

Size ►	8 x 12	8 x 14	8 x 16	10 x 16	10 x 20	14 x 18
Velocity (fpm) 600	398	464	531	663	829	1045
800	531	619	707	884	1105	1393
1000	663	774	884	1105	1382	1741
1200	796	928	1061	1326	1658	2089
1400	928	1083	1238	1547	1934	2437
1600	1061	1238	1415	1769	2211	2785
Blades	2	2	2	3	3	4
Ship Wt	8 lbs	10 lbs	12 lbs	14 lbs	16 lbs	18 lbs

Recommended

Rectangular Bypass Damper
Capacity (cfm), Dimensions, Blades, and Weights

Size ►	14 x 12	16 x 16	20 x 20	30 x 20
Velocity (fpm) 600	696	1061	1658	2487
800	928	1415	2211	3316
1000	1161	1769	2763	4145
1200	1393	2122	3316	4974
1400	1625	2476	3869	5803
1600	1857	2830	4421	6632
1800	2089	3183	4974	7461
2000	2321	3537	5527	8290
Blades	2	3	3	3
Ship Wt	16 lbs	21 lbs	29 lbs	40 lbs

Recommended

Notes:
1. Recommended velocity for zone dampers is between 1000 and 1600 fpm. Use good standard design practices (such as location of duct).
2. Recommended velocity for bypass damper is between 1600 and 2000 fpm.

Selection Procedures

Model Number Descriptions

VADA Product Coding Explanation

The features of VariTrac air dampers are described by valid product categories (VPC). Options for each VPC are described by selectable items (SI).

The following describes VPCs and SIs for ordering VariTrac air dampers.

MODL Unit Model

VADA=VariTrac Air Damper Development Sequence A

VARA=VariTrac Rectangular Air Damper

DSEQ Design Sequence

(Factory Use)

DMPR VariTrac Damper Size

06=6" (152 mm) round damper

08=8" (203 mm) round damper

10=10" (254 mm) round damper

12=12" (305 mm) round damper

14=14" (356 mm) round damper

16=16" (406 mm) round damper

1412=14 x 12 rectangular bypass damper

1616=16 x 16 rectangular bypass damper

2020=20 x 20 rectangular bypass damper

3020=30 x 20 rectangular bypass damper

0812=8 x 12 rectangular zone damper

0814=8 x 14 rectangular zone damper

0816=8 x 16 rectangular zone damper

1016=10 x 16 rectangular zone damper

1020=10 x 20 rectangular zone damper

1418=14 x 18 rectangular zone damper

CTRL Unit Control

BYPS=Bypass for round damper

CHGR=Changeover

ELEC=Electric, Three-State Heat-Disabled with Primary Heat

NCHW=Normally-closed Hot Water Valve, One-State Heat-Enabled w/ Primary Heat

BYR=Bypass for rectangular damper

OPTN VariTrac Options

SNSR=Duct Temperature Sensor

Notes:

1. When the Unit Control, CTRL, is Bypass, BYPS or BYR, the option of a Zone Duct Temperature Sensor, SNSR, is not available.
2. Unit Control ELEC is typically used with electric resistant duct heaters. The auxiliary heat is disabled when the primary heat is activated to protect the heating coils.
3. Unit Control NCHW is typically used with perimeter heating, hot water, steam, or electric resistant perimeter. It is always enabled, regardless of whether the primary system is heating or cooling.

Selection Procedures

Service Model Numbers

V	A	D	A	0	6	A	0	0	P	0
1	2	3	4	5	6	7	8	9	10	11

Digits 1, 2, 3, 4 – Product Type

VADA = VariTrac Air Damper

VARA = Rectangular Air Damper

Digits 5, 6 – VariTrac Damper Size

06 = 6" Damper

08 = 8" Damper

10 = 10" Damper

12 = 12" Damper

14 = 14" Damper

16 = 16" Damper

1R = 14 x 12 bypass damper

2R = 16 x 16 bypass damper

3R = 20 x 20 bypass damper

4R = 30 x 20 bypass damper

5R = 8 x 12 zone damper

6R = 8 x 14 zone damper

7R = 8 x 16 zone damper

8R = 10 x 16 zone damper

9R = 10 x 20 zone damper

AR = 14 x 18 zone damper

Digit 7 – Controls (all factory downloaded and verified)

A = Bypass with actuator

B = Damper only control (Changeover)

C = Damper plus up to 3 stages of Electric

D = Damper plus 1-stage Normally-open hot water

E = Damper plus 1-stage Normally-closed hot water

F = Not used

G = No controls (Actuator Only)

H = Not used

J = Bypass for rectangular damper with actuator

Digits 8, 9, 10, 11

00P0 = Design sequence

Selection Procedures

Typical Bill of Materials

Table 3. Typical VariTrac changeover-bypass VAV system components

	Device Name	Function in System	Number Required
A	Central control panel w/optional operator display	Controls the HVAC system and provides local operator interface	One per HVAC unit/VariTrac system (thermal zone)
B	Communicating bypass controller	Sends supply duct temperature and pressure to the central control panel	One per VariTrac system
C	Bypass damper(s)	Supply air duct volume control to maintain appropriate static pressure in the duct	One or two per system as needed to bypass from supply to return airstream
D	VariTrac dampers	Varies air volume to the space to control comfort	One per comfort zone
E	Zone sensors	Sends space temperature and setpoint information to the zone damper controller	One per comfort zone (DDC sensor w/ LCD requires 4 VA)
F	CCP power supply	24V power for the central control panel	The CCP must have a dedicated 24V power supply
G	Zone damper power supply(s)	24V power for the zone dampers	Power supplies may be shared; each zone requires 10VA (plus the load of optional outputs)
H	Trane rooftop communications interface	Allows the CCP and Trane rooftop controller to communicate with each other via simple twisted shielded wire pair	One per controlled Trane rooftop with ReliaTel controller
J	Optional relay board	Provides 24V control of any non-communicating HVAC unit	One per controlled non-communicating HVAC unit

Figure 31. Typical components in a changeover-bypass VAV system

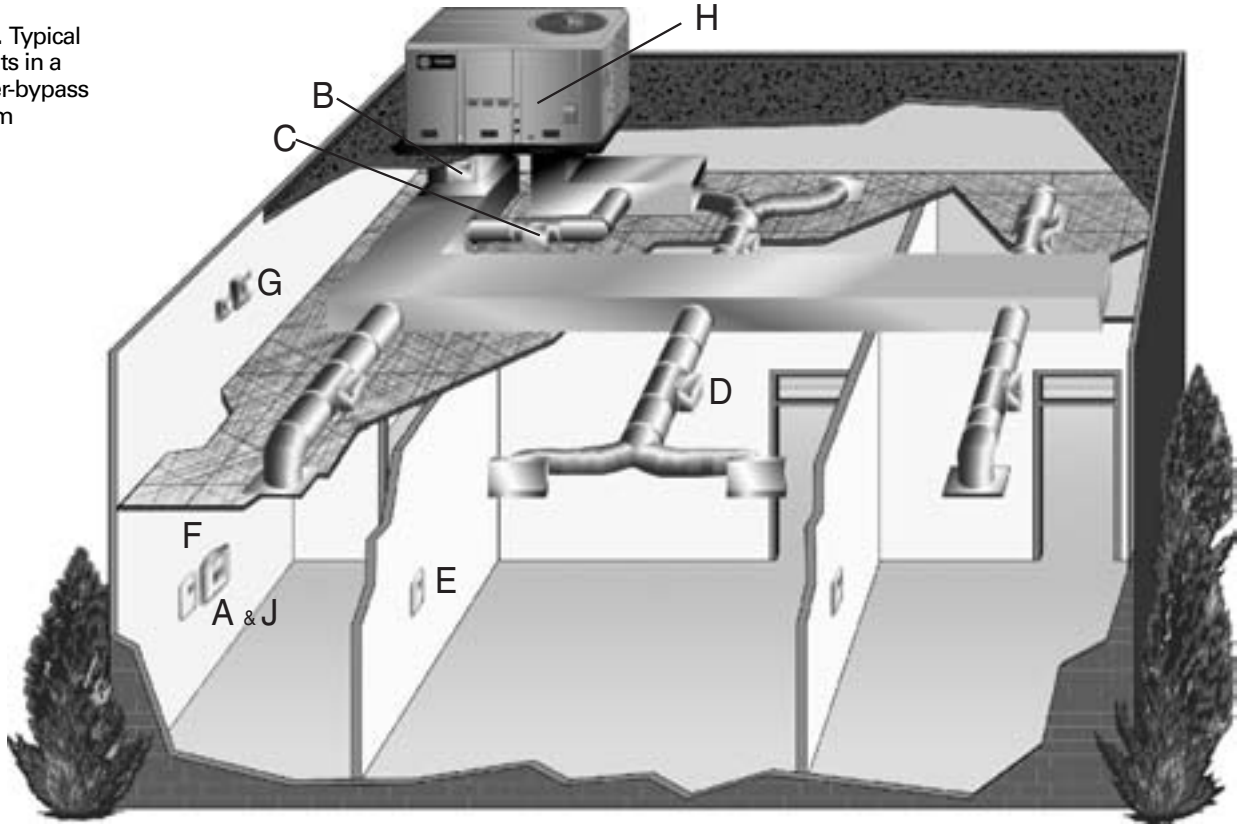

Electrical Data and Connections

Figure 32. Central control panel field wiring

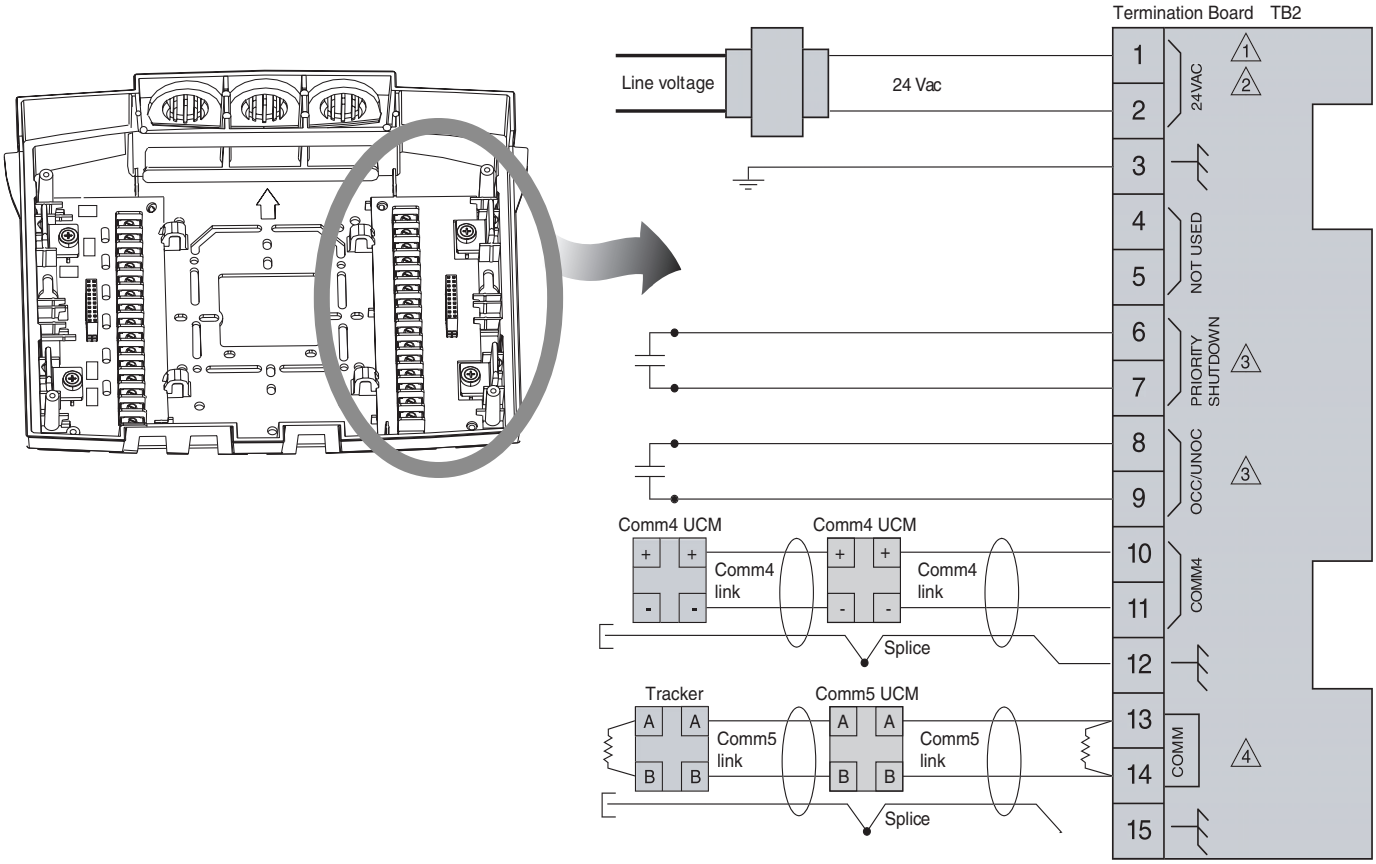

Legend

- = Transformer
- = Figure note
- = Termination resistor
- = Twisted pair, shielded wire per Trane specifications
- = Shield termination
- = Contact points
- = Earth ground
- = Shield ground

Figure Notes:

1 All customer wiring must be in accordance with national, state, and local electrical codes.

2 Trane recommends a dedicated transformer for 24 Vac power.

3 Do not apply voltage to the priority shutdown and occupancy inputs.

4 Example of Comm5 communication link wiring. See product-specific literature for Comm5 wire connection details.

Electrical Data and Connections

Figure 33. Relay board wiring

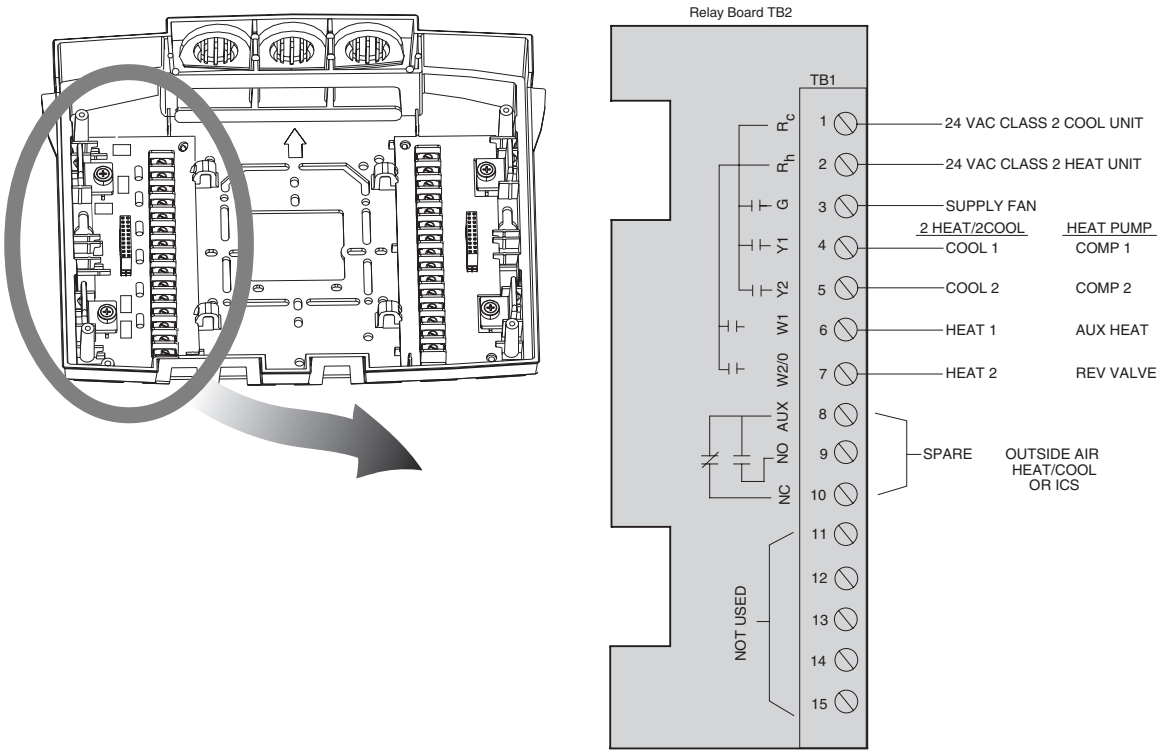

Figure 34. Typical relay board wiring

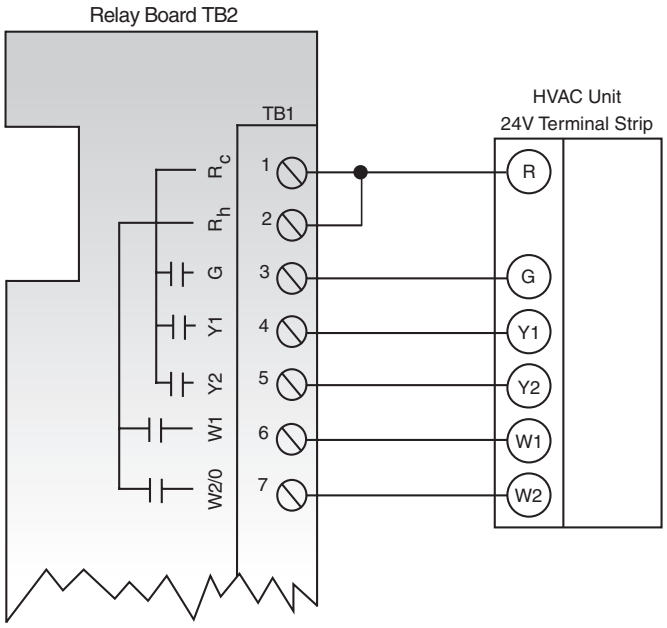

Electrical Data and Connections

Figure 35. UCM Comm Link Wiring

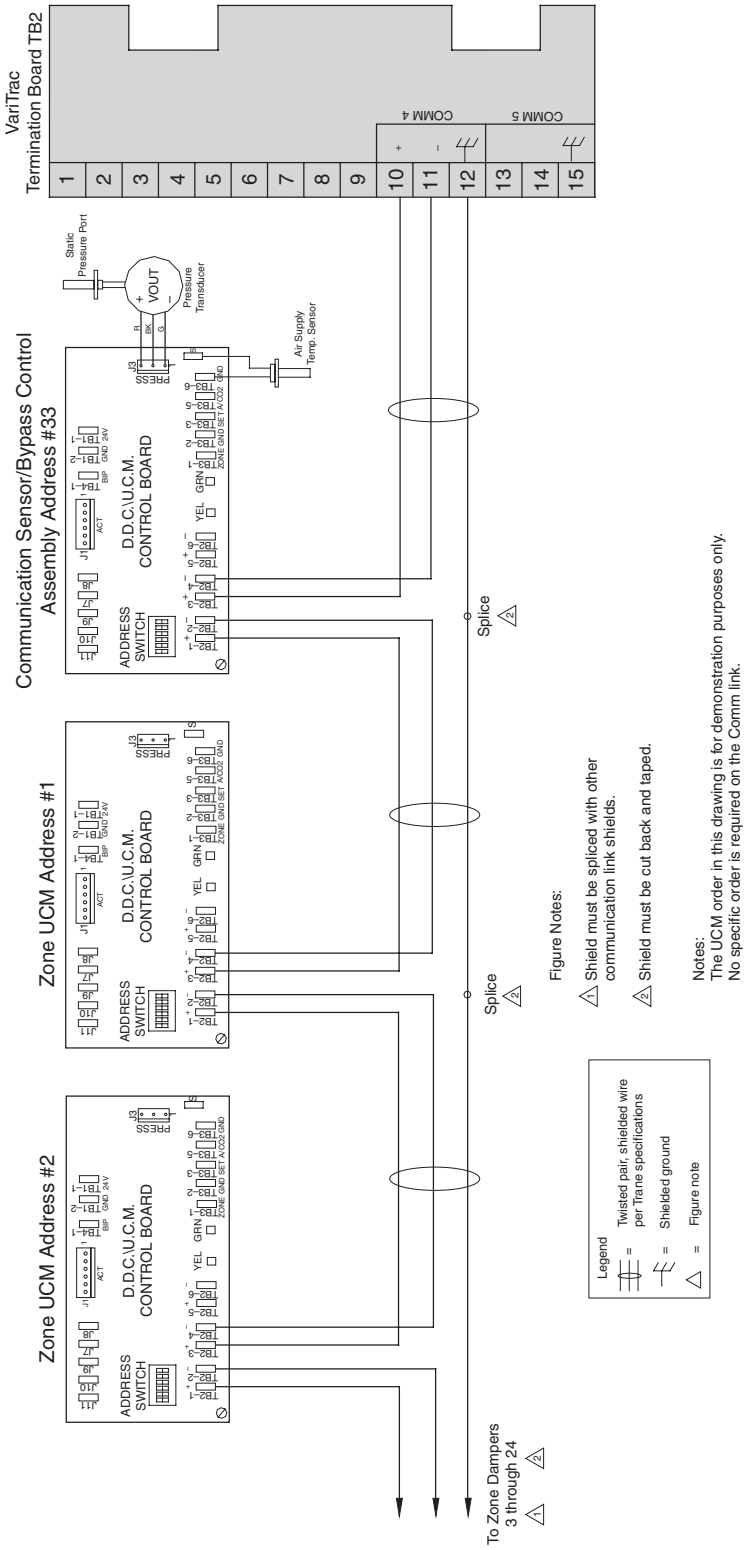

Electrical Data and Connections

Figure 36. Communicating bypass controller wiring

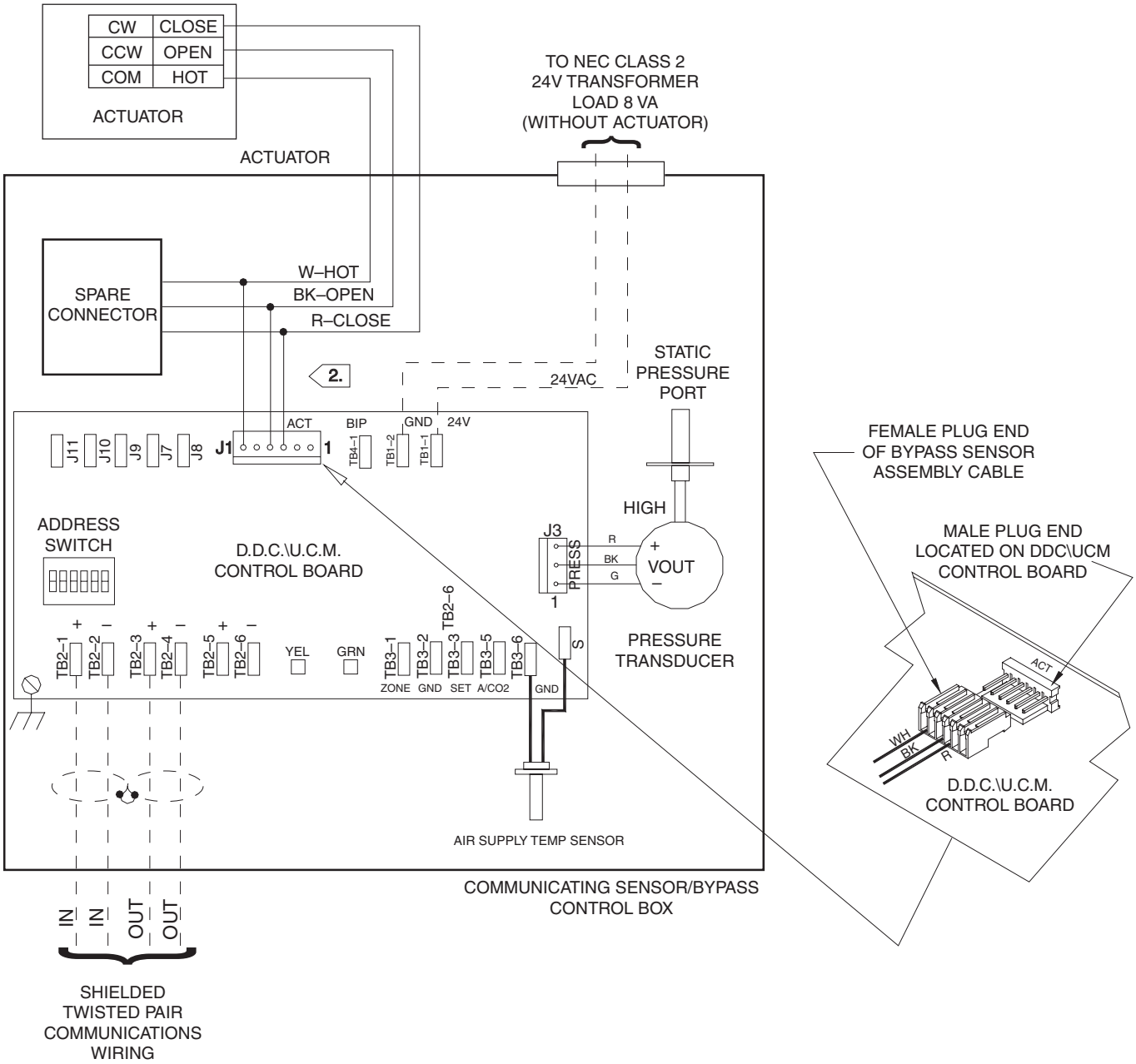

Electrical Data and Connections

Figure 37. UCM Wiring

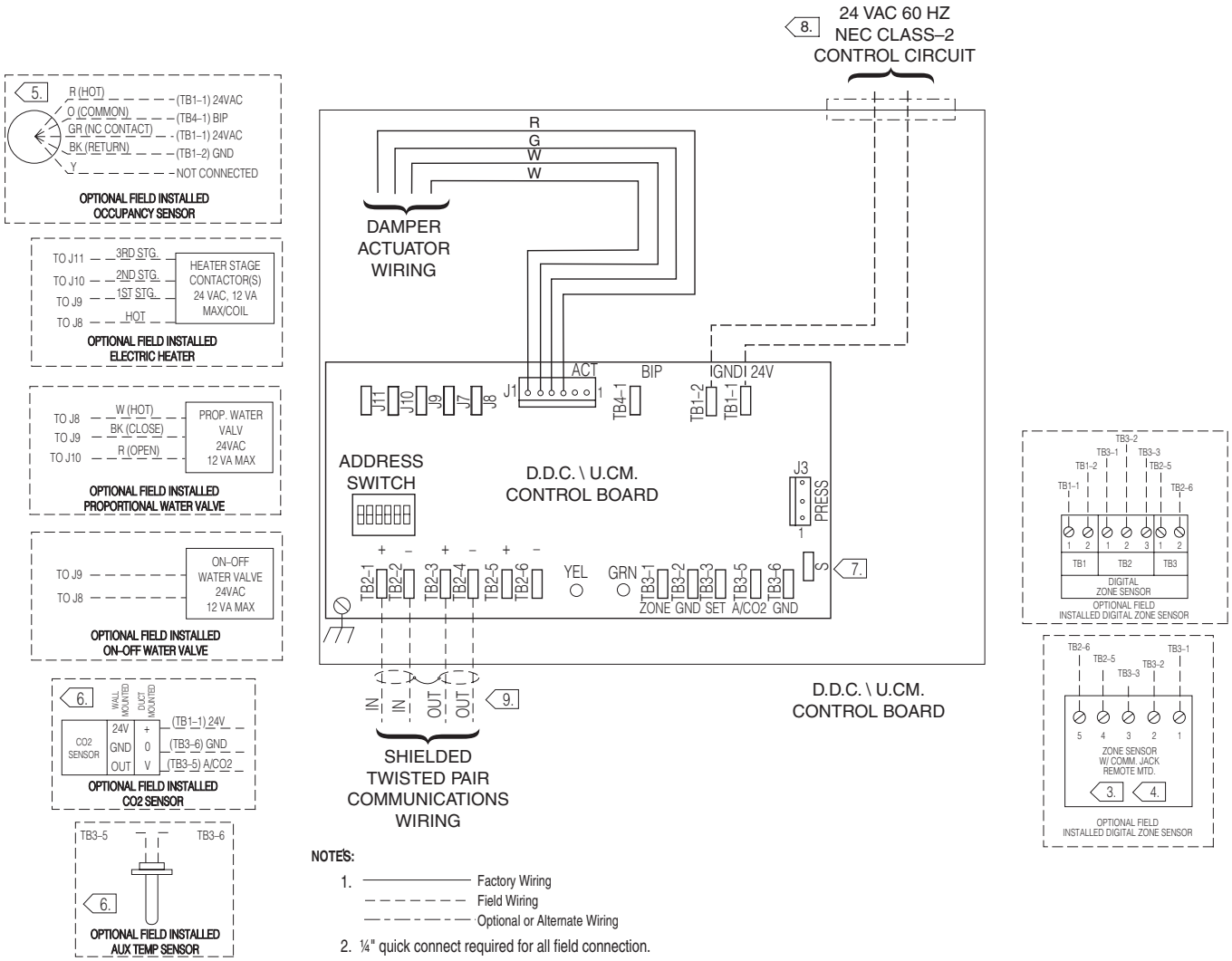

NOTES:

1. Factory Wiring
   Field Wiring
   Optional or Alternate Wiring
2. ¼" quick connect required for all field connection.

3. Zone sensor terminals 4 and 5 require shielded twisted pair wiring for communications jack equipped zone sensor options

4. No additional wiring required for night setback override (on/cancel).

5. The optional binary input connects between TB4–1 (BIP) and 24VAC (HOT) from transformer. The binary input can be reconfigured as an occupancy input via the communications interface.

6. As shipped, the aux input is configured as an AUX input. The AUX input can be reconfigured as a CO2 sensor input via the communications interface.

7. S terminal not to be used with this applications.

8. If unit mounted transformer is not provided, polarity from unit to unit must be maintained to prevent permanent damage to control board. If one leg of 24VAC supply is grounded, then ground leg must be connected to TB1–2.

9. Shields of communication wiring should be tied together and insulated.

Electrical Data and Connections

Figure 38. DDC zone sensor with LCD

Digital Sensor Terminal Connection Chart

Sensor	UCM	Field Wire Color Code
TB1–1	TB1–1	
TB1–2	TB1–2	
TB2–1	TB3–1	
TB2–2	TB3–2	
TB2–3	TB3–3	
TB3–1	TB2–5	
TB3–2	TB2–6	

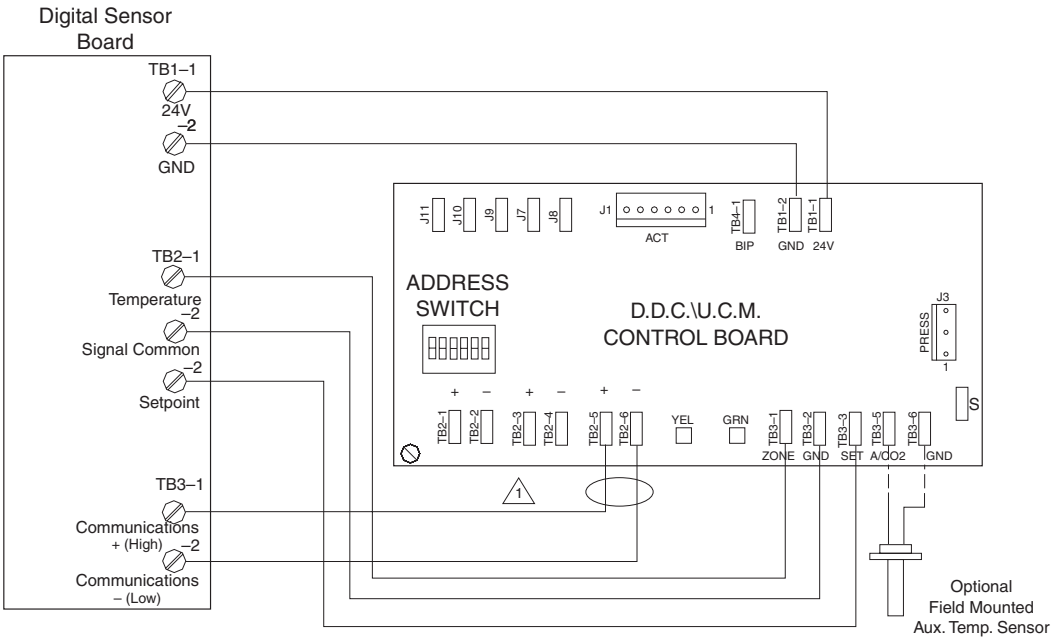

Figure 39. DDC zone sensor wiring

Mechanical Sensor Terminal Connection Chart

Sensor	UCM	Field Wire Color Code
TB1–1	TB3–1	
TB1–2	TB3–2	
TB1–4	TB2–5	
TB1–5	TB2–6	

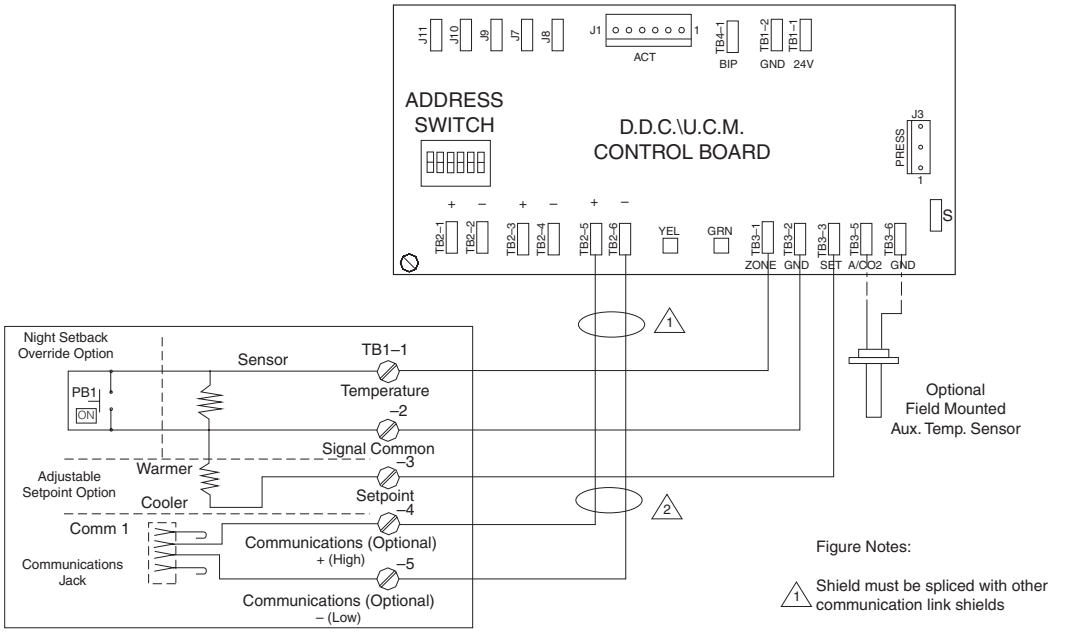

Figure Notes:

1 Shield must be spliced with other communication link shields

2 Shield must be cut back and taped at sensor.

Specifications

Figure 40. VariTrac DDC zone sensors

Table 4. Zone sensor options

Zone Sensor Options	Number of Required Wires[1]
Sensor only (no communications jack available)	2
Sensor with adjustable setpoint	3
Sensor with night setback override and cancel buttons	2
Sensor with adjustable setpoint and night setback override and cancel buttons	3
Sensor with digital display and adjustable setpoint and night setback override and cancel buttons	5[2]

Notes:

[1] Most sensors have a communication jack available as an option. If these jacks are used, they must be wired to the UCM using an approved two-conductor, shielded cable. The communication jacks do not need to be wired for the system to operate properly.

[2] Three wires are required for sensor connections. Two wires are required for 24-Vac power connection.

Specifications

Figure 41. VariTrac central control panel components

Table 5. VariTrac control panel specifications

Power Requirements	20–30 Vac, 60 Hz, single-phase, 30 VA minimum. Class 2 transformer required.
Operating Environment	32°–122°F (0°–50°C), 10–90% relative humidity, non-condensing
Storage Environment	-40°F–122°F (-40°–85°C), 5–95% relative humidity, non-condensing
Control Enclosure	NEMA 1 resin enclosure, plenum rated
Mounting	Mount directly on wall surface or mount on recessed 4" x 4" (101.6 mm x 101.6 mm) conduit box.
Weight	2.5 lbs. (1.13 kg)
Communication Link Wiring	Communication link wiring must be Level 4 22-AWG twisted shielded pair wire with stranded tinned copper conductors. Maximum total wire length is 3,500 ft (1066.8 m). Wire must meet Trane specifications.
Binary Input	Voltage (provided by VariTrac CCP): 10–14 Vdc Current (provided by VariTrac CCP): 10–14 mA **Note:** Only "dry" contacts may be attached to binary inputs.
UL Approval	The VariTrac Central Control Panel is UL approved.
Memory Backup	Upon a power loss, all operator-edited data stored in the VariTrac Central Control Panel is maintained permanently.

Figure 42. VariTrac UCM round damper

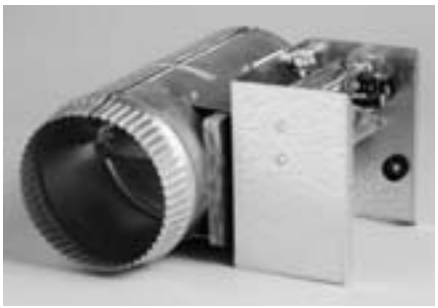

Table 6. UCM damper specifications

Power Requirements	20–30 Vac, 60Hz, single-phase 10 VA minimum (plus load of optional heat outputs). Class 2 transformer required.
Operating Environment	32°–120°F (0°–49°C). 10–90% relative humidity, non-condensing
Storage Environment	-50°–200°F (-46°–93°C). 5–95% relative humidity, non-condensing
Control Enclosure	NEMA 1 metal enclosure, plenum rated
Communication Link Wiring	Communication link wiring must be Level 4 22-AWG twisted shielded pair wire with stranded tinned copper conductors. Maximum total wire is 3,500 ft (1066.8 m). Wire must meet Trane specifications.

Specifications

Figure 43. Communicating bypass controller

Table 7. Communicating bypass control assembly specifications

Power Requirements	20–30 Vac, 60Hz, single-phase 15 VA minimum. Class 2 transformer required.
Operating Environment	32°–120°F (0°–49°C). 10–90% relative humidity, non-condensing
Storage Environment	-50°–200°F (-46°–93°C). 5–95% relative humidity, non-condensing
Control Enclosure	NEMA 1 metal enclosure, plenum rated
Communication Link Wiring	Communication link wiring must be Level 4 22-AWG twisted shielded pair wire with stranded tinned copper conductors. Maximum total wire is 3,500 ft (1066.8 m). Wire must meet Trane specifications.

Figure 44. Zone occupancy sensor

Ideal for zones with intermittent occupancy like conference rooms). When occupied, the zone reverts to unoccupied setpoints to save energy.

Table 8. Zone occupancy sensor specifications

Power Supply	24 Vac or 24 Vdc, ±10%
Maximum VA Load	0.88 VA @ 24 Vac, 0.722 VA @ 24 Vdc
Isolated Relay Rating	1 A @ 24 Vac or 24 Vdc
Operating Temperature	32°–131°F (0°–55°C)
Storage Temperature	-22°–176°F (-30°–80°C)
Humidity Range	0–95% non-condensing
Effective Coverage Area	1200 sq. ft (365.8 m)
Effective Coverage Radius	22 ft (6.7 m)
Housing Material	ABS plastic

Specifications

Figure 45. DDC zone sensor with digital display

Table 9. Digital zone sensor specifications

Thermistor Resistance Rating	10kW at 77° (25°C)
Accuracy at 77°F (25°C)	0.4°F (0.2°C)
Setpoint Resistance Rating	500 Ohms at 70°F (21.2°F)
Display Zone Temperature Range	40°–99°F (10° to 35°C)
Display Setpoint Range	50°–90°F (10° to 32°C)
Operating Temperature	0°–120°F (–18° to 49°C)
Storage Temperature	–20°–130°F (–29° to 54°C)
Humidity Range	5–95% non-condensing
Power Supply	24 VAC
Maximum VA Load	4 VA
Housing Material	Rigid vinyl

Figure 46. CO_2 duct sensor

Figure 47. CO_2 wall sensor

Table 10. CO_2 sensor specifications

	Duct	Wall
Dimensions	3 1/8" × 3 1/8" × 7 3/4"	4 1/4" × 3 1/8" × 1 7/16"
Operating Temperature	23°–113°F (–5°–45°C)	59°–95°F (15°–35°C)
Accuracy at 77°F (25°C)	< ± (30 ppm CO_2 + 3% of reading)	< ± (40 ppm CO_2 + 3% of reading)
Measuring Range	0-2000 parts per million (ppm)	
Recommended Calibration Interval	5 years	
Response Time	1 minute (0–63%)	
Storage Temperature	–4°–158°F (–20°–70°C)	
Humidity Range	0 to 85% relative humidity (RH)	
Output Signal (jumper selectable)	4-20 mA, 0-20 mA, 0-10 VDC	
Resolution of Analog Outputs	10 ppm CO_2	
Power Supply	Nominal 24 VAC	
Power Consumption	<5 VA	
Housing Material	ABS plastic	

Acoustics

Acoustics are tricky to define for specific jobsites. To provide an acoustical overview of a typical office system with mineral glass fiber dropped ceiling, ARI standard 885-98 has generated the transfer functions in Table 11.

Sound power data was collected in accordance with ARI Standard 880. Applying the transfer function for sound reduction due to office furnishings, materials, etc. generated the NC data which follows. This is a reference document only provided to address general acoustical issues. What you will find is that the sound in the occupied spaces generated by the VariTrac dampers is minimal when compared to the main HVAC unit sound generation.

Some general ideas to minimize acoustical issues:

- pay close attention to location of the HVAC unit. This will typically set the overall acoustical quality of your job.
- locate VariTrac dampers outside the occupied space.
- internally lined ductwork can be used to reduce the discharge sound generated by the HVAC unit.
- install flex duct with minimal sagging, and turns.
- locate balancing dampers as far from the diffuser as possible to limit airborne noise.

Note: VariTrac dampers do not carry the ARI seal.

Table 11. Acoustical transfer functions

ARI 885-98 Discharge Transfer Function Assumptions

	Octave Band					
	2	**3**	**4**	**5**	**6**	**7**
Small Box (<300 cfm)	-24	-28	-39	-53	-59	-40
Medium Box (<300–700 cfm)	-27	-29	240	-51	-53	-39
Large Box (>700 cfm)	-29	-30	-41	-51	-52	-39

Note: Add to terminal unit sound power to determine discharge sound pressure in the space.

ARI 885-98 Radiated Transfer Function Assumptions

	Octave Band					
	2	**3**	**4**	**5**	**6**	**7**
Type 2 Mineral Fiber Insulation	-18	-19	-20	-26	-31	-36

Table 12. Radiated sound data

NC Based on 885-98 Mineral Tile

Size	Radiated NC	Size
6 in.	33	470
8 in.	26	840
10 in.	25	1310
12 in.	26	1885
14 in.	29	2140
16 in.	21	2515

NC based on maximum rated airflow conditions.

Acoustics

Table 13. Discharge sound data

Size	CFM	ISP	Discharge NC
6 in.	375	0.25	—
6 in.	375	0.5	—
6 in.	375	1	18
6 in.	375	2	22
6 in.	300	0.25	
6 in.	300	0.5	—
6 in.	300	1	—
6 in.	300	2	19
6 in.	225	0.25	—
6 in.	225	0.5	—
6 in.	225	1	—
6 in.	225	2	16
6 in.	150	0.25	—
6 in.	150	0.5	—
6 in.	150	1	—
6 in.	150	2	16
6 in.	75	0.25	—
6 in.	75	0.5	—
6 in.	75	1	—
6 in.	75	2	16
6 in.	38	0.25	—
6 in.	38	0.5	—
6 in.	38	1	—
6 in.	38	2	15
8 in.	656	0.25	—
8 in.	656	0.5	16
8 in.	656	1	24
8 in.	656	2	30
8 in.	525	0.25	—
8 in.	525	0.5	—
8 in.	525	1	20
8 in.	525	2	25
8 in.	394	0.25	—
8 in.	394	0.5	—
8 in.	394	1	16
8 in.	394	2	22
8 in.	263	0.25	—
8 in.	263	0.5	—
8 in.	263	1	—
8 in.	263	2	23
8 in.	131	0.25	—
8 in.	131	0.5	—
8 in.	131	1	15
8 in.	131	2	24
8 in.	66	0.25	—
8 in.	66	0.5	—
8 in.	66	1	—
8 in.	66	2	20

Size	CFM	ISP	Discharge NC
10 in.	1031	0.25	—
10 in.	1031	0.5	15
10 in.	1031	1	21
10 in.	1031	2	27
10 in.	825	0.25	—
10 in.	825	0.5	—
10 in.	825	1	17
10 in.	825	2	22
10 in.	619	0.25	—
10 in.	619	0.5	—
10 in.	619	1	—
10 in.	619	2	20
10 in.	413	0.25	—
10 in.	413	0.5	—
10 in.	413	1	—
10 in.	413	2	19
10 in.	206	0.25	—
10 in.	206	0.5	—
10 in.	206	1	—
10 in.	206	2	19
10 in.	103	0.25	—
10 in.	103	0.5	—
10 in.	103	1	—
10 in.	103	2	18
12 in.	1500	0.25	—
12 in.	1500	0.5	15
12 in.	1500	1	21
12 in.	1500	2	29
12 in.	1200	0.25	—
12 in.	1200	0.5	—
12 in.	1200	1	17
12 in.	1200	2	25
12 in.	900	0.25	—
12 in.	900	0.5	—
12 in.	900	1	—
12 in.	900	2	22
12 in.	600	0.25	—
12 in.	600	0.5	—
12 in.	600	1	—
12 in.	600	2	21
12 in.	300	0.25	—
12 in.	300	0.5	—
12 in.	300	1	—
12 in.	300	2	20
12 in.	150	0.25	—
12 in.	150	0.5	—
12 in.	150	1	—
12 in.	150	2	19

Size	CFM	ISP	Discharge NC
14 in.	2000	0.25	—
14 in.	2000	0.5	17
14 in.	2000	1	24
14 in.	2000	2	30
14 in.	1600	0.25	—
14 in.	1600	0.5	—
14 in.	1600	1	19
14 in.	1600	2	26
14 in.	1200	0.25	—
14 in.	1200	0.5	—
14 in.	1200	1	15
14 in.	1200	2	23
14 in.	800	0.25	—
14 in.	800	0.5	—
14 in.	800	1	—
14 in.	800	2	23
14 in.	400	0.25	—
14 in.	400	0.5	—
14 in.	400	1	—
14 in.	400	2	23
14 in.	200	0.25	—
14 in.	200	0.5	—
14 in.	200	1	—
14 in.	200	2	20
16 in.	2625	0.25	—
16 in.	2625	0.5	17
16 in.	2625	1	25
16 in.	2625	2	32
16 in.	2100	0.25	—
16 in.	2100	0.5	—
16 in.	2100	1	23
16 in.	2100	2	29
16 in.	1575	0.25	—
16 in.	1575	0.5	—
16 in.	1575	1	22
16 in.	1575	2	27
16 in.	1050	0.25	—
16 in.	1050	0.5	—
16 in.	1050	1	—
16 in.	1050	2	22
16 in.	525	0.25	—
16 in.	525	0.5	—
16 in.	525	1	—
16 in.	525	2	23
16 in.	263	0.25	—
16 in.	263	0.5	—
16 in.	263	1	—
16 in.	263	2	23

Note: NC data based on ARI 885-98 Acoustical transfer functions in Table 11.

Dimensions and Weights

Figure 48. Central control panel dimensions

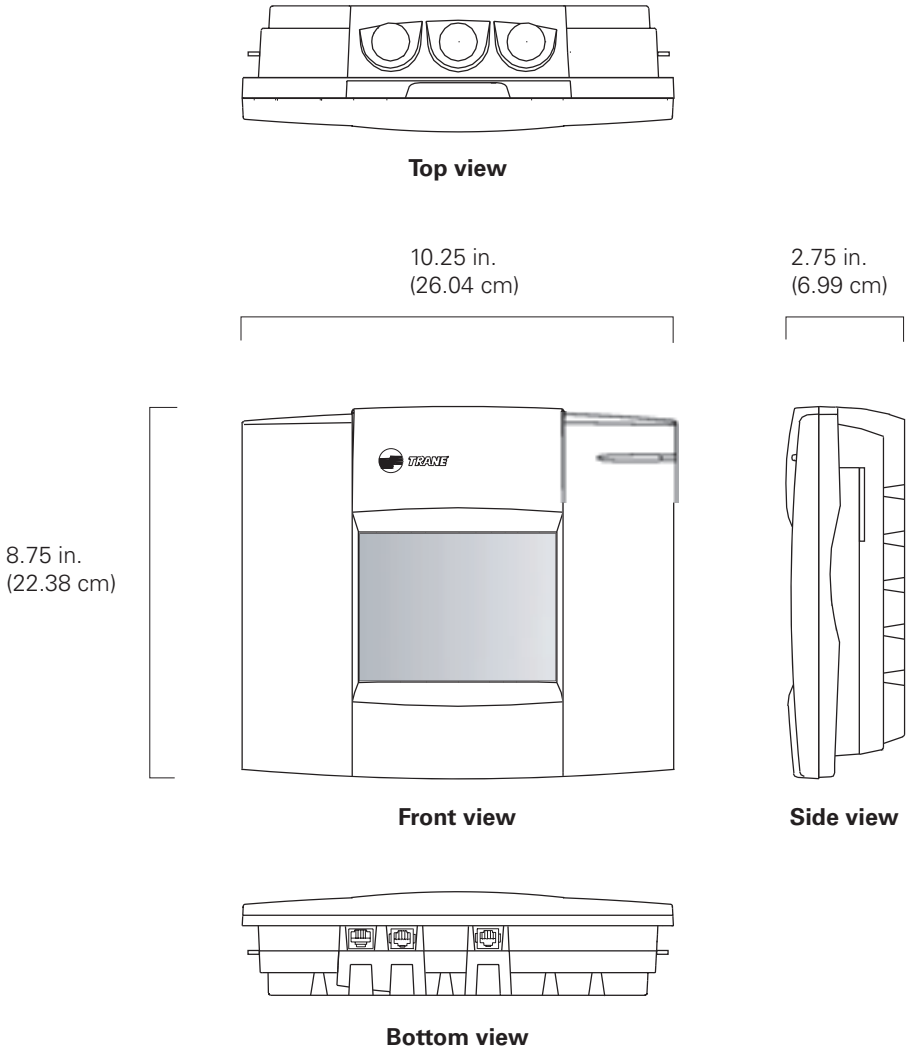

Note:
1. Central control panel weight is 2.5 lbs.

Dimensions and Weights

Figure 49. Communicating bypass control dimensions

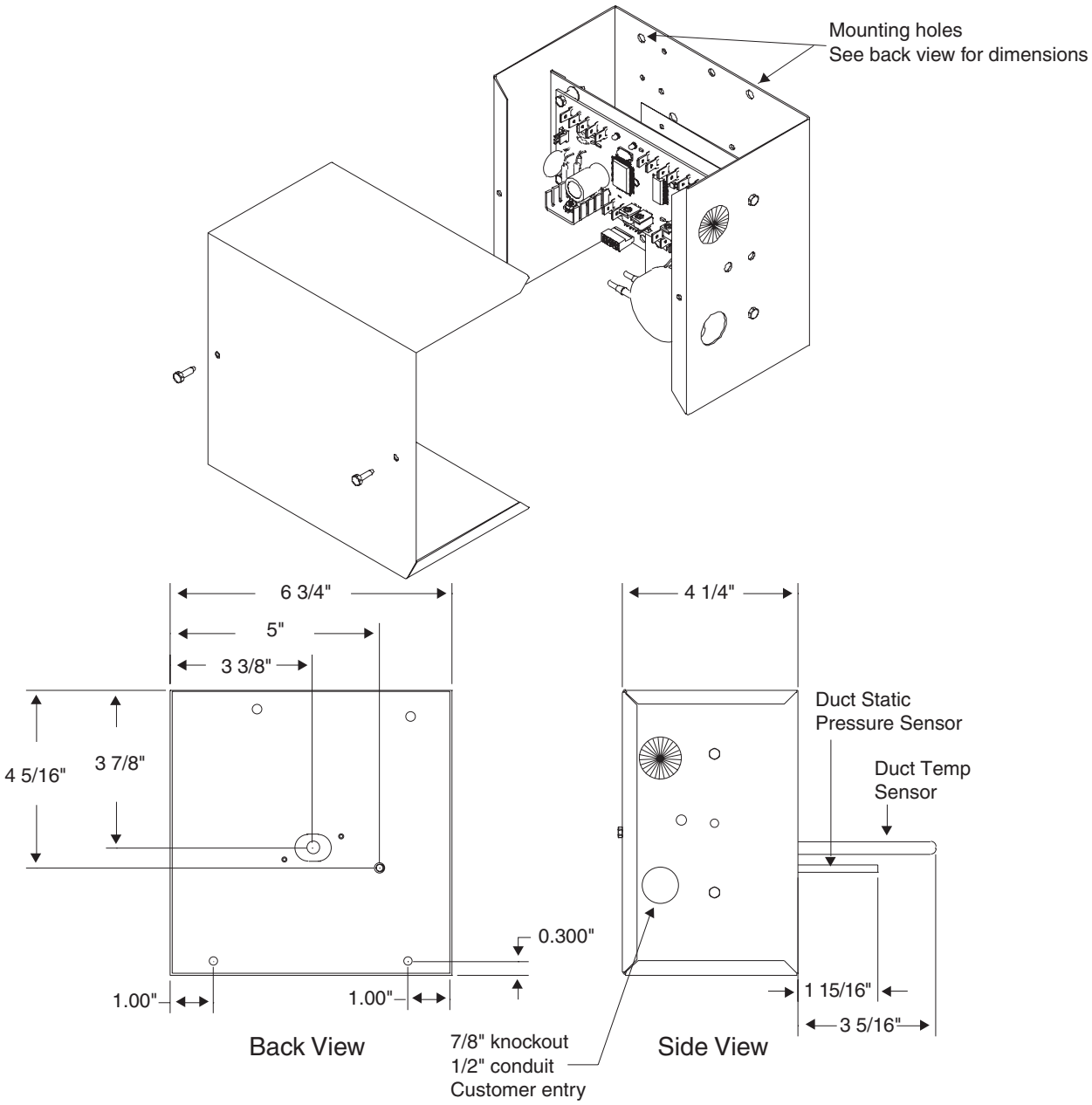

Notes:

Weight	3 1/4 lbs
Operating Temp	32˚ to 140˚
Humidity	5 to 95% (non-condensing)
Mounting Method	Metal screws

Dimensions and Weights

Figure 50. Round zone and bypass damper dimensions

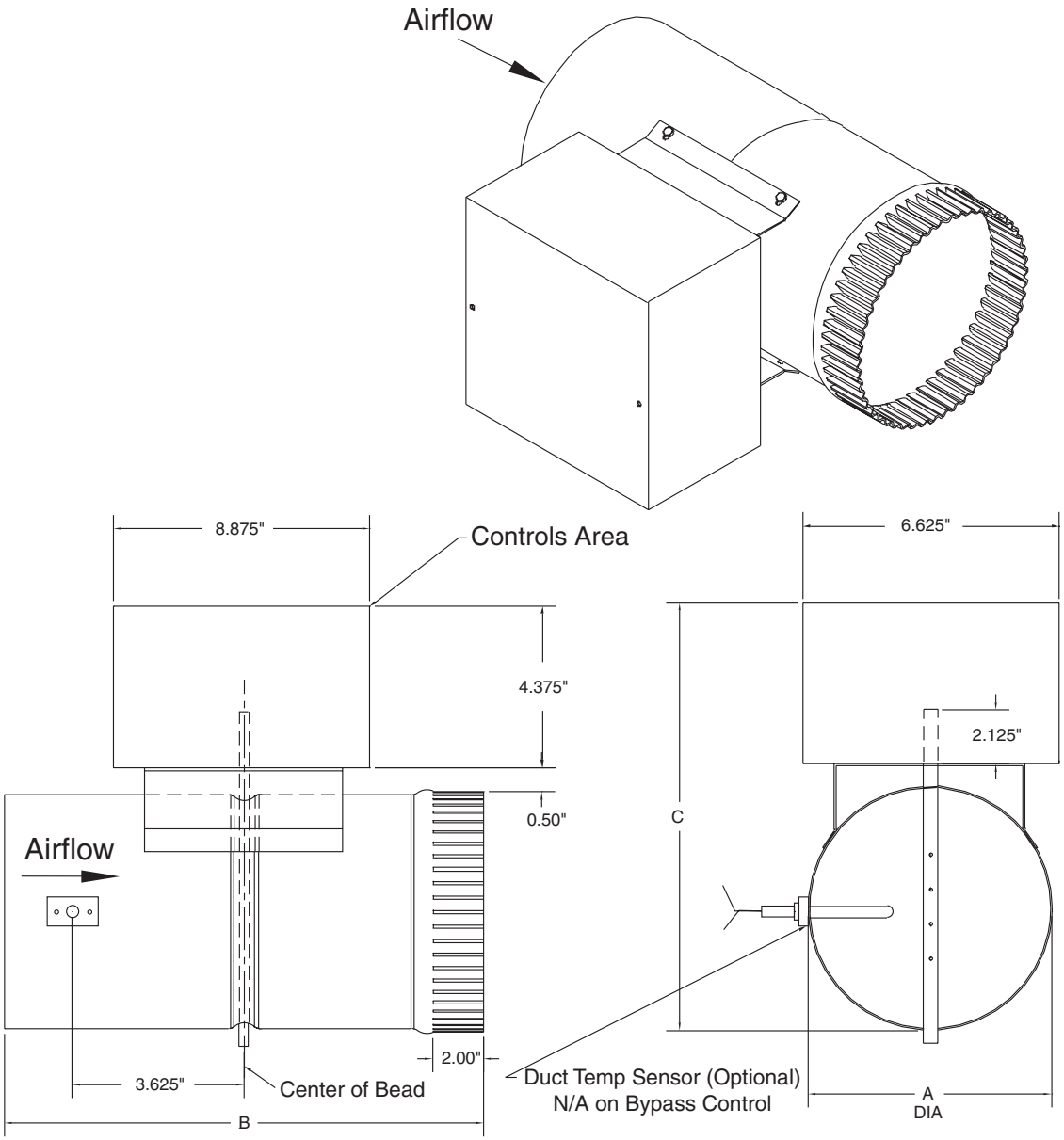

Damper Size	A	B	C	Nominal CFM	Weight
6"	6.375"	12.00"	11.125"	300	6 lbs
8"	8.375"	12.00"	13.125"	500	7 lbs
10"	10.375"	16.00"	15.125"	800	8 lbs
12"	12.375"	16.00"	17.125"	1100	9 lbs
14"	14.375"	20.00"	19.125"	1600	11 lbs
16"	16.375"	20.00"	21.125"	2000	12 lbs

Dimensions and Weights

Figure 51. Rectangular zone damper dimensions

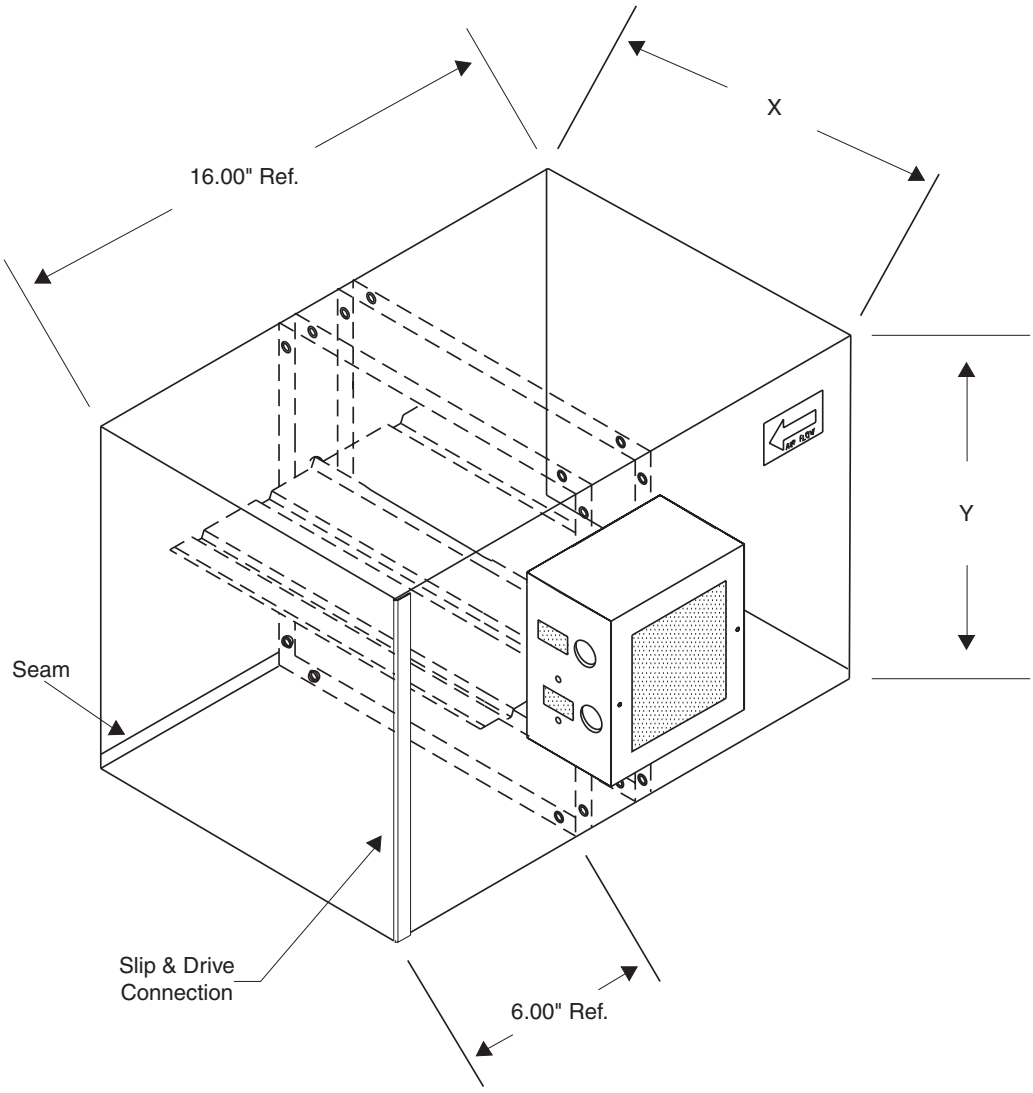

Dimensions

X	Y
8.00"	12.00"
8.00"	14.00"
8.00"	16.00"
10.00"	16.00"
10.00"	20.00"
14.00"	18.00"

Damper Frame Data

Frame	16-gage galvanized steel
Blades	16-gage galvanized steel All blades are 3.19" nominal width and 8" maximum
Gear	ABS plastic
Blade Pin	3/8" rolled steel, zinc plated

Dimensions and Weights

Figure 52 Rectangular bypass damper dimensions

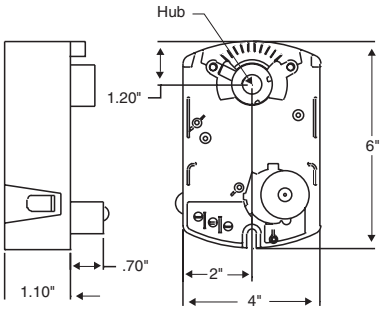

Actuator Dimensions

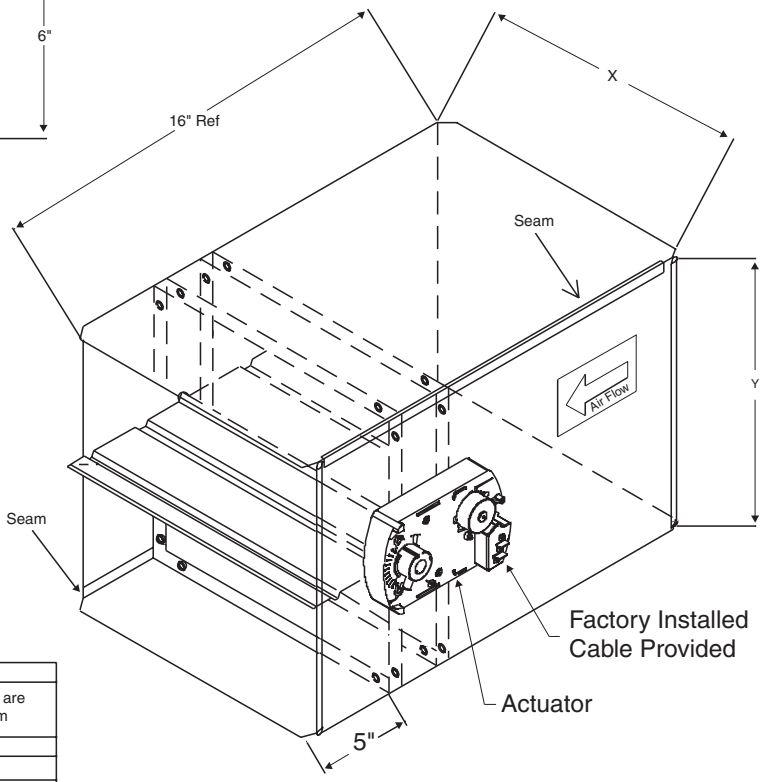

Dimensions	
X	Y
14"	12"
16"	16"
20"	20"
30"	20"

Wiring	Actuator	CCP
Red	CCW	Close
White	COM	Com
Black	CW	Open

Damper Frame Data

Frame	13 gage galvanized steel
Blades	16 gage galvanized steel; blades are 6" nominal width and 8" maximum
Linkage	1/8" rolled steel, zinc plated
Blade Pin	3/8" square steel, zinc plated
Blade Pin Extension	7/16" diameter, 7" long Included with all dampers
Bearings	Self-lubricating acetol
Blade Seals	None
Side Seals	None
Cable	10"
Weight	

Dimensions and Weights

Figure 53. Occupancy Sensor

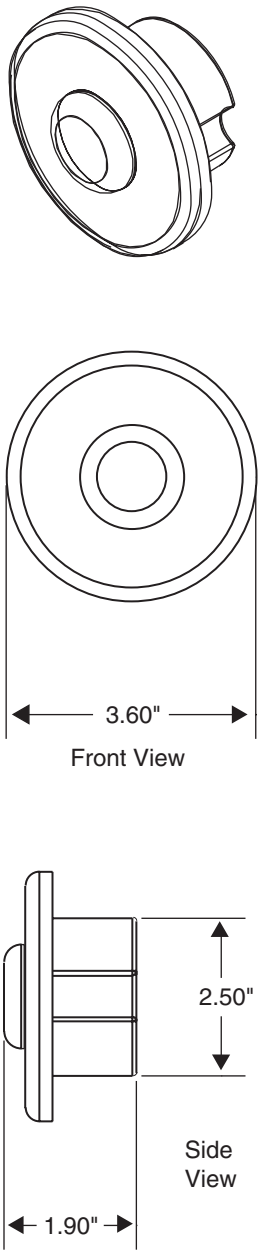

Figure 54. CO_2 Sensor dimensions

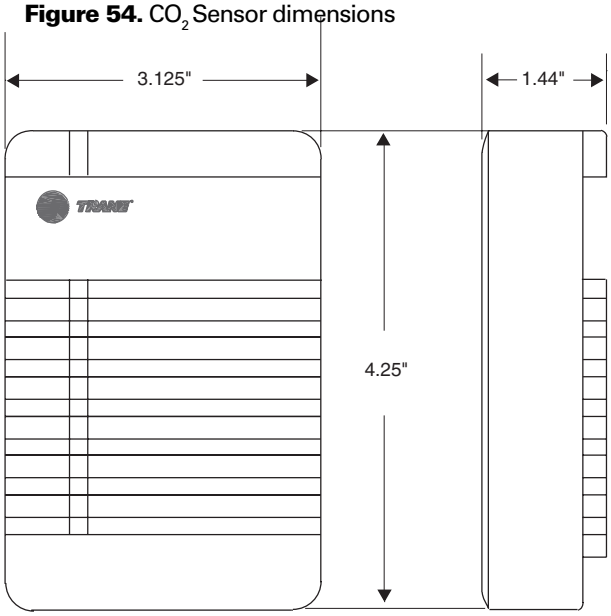

Figure 55. Digital Zone Sensor

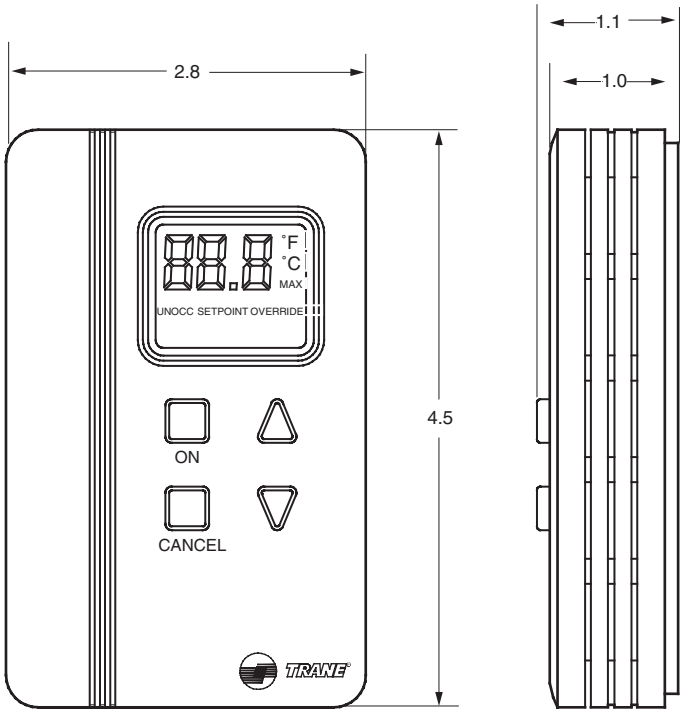

Glossary

ABS gears – Gears formed of a lightweight plastic known for its toughness, impact strength, and dimensional stability.

Back draft damper – A one-way airflow damper in a parallel fan powered unit prevents primary flow from exiting the plenem inlet.

Binary input – A two-position signal indicating on/off status.

Binary output – A control output that is either on or off.

Built-in time clock –The occupancy timer included in the CCP operator display.

Bypass damper – The motorized damper ducted between the system supply and return ducts used to control static pressure in changeover bypass VAV systems.

Central control panel (CCP) –The system level control device in a Trane changeover bypass or delivered VAV system that gathers data from zone controllers and operates the HVAC unit to maintain the correct air flow and temperature.

Changeover-bypass VAV – A control that provides variable air volume functionality to a constant volume air handling system.

CO_2 sensor – An analog sensor that detects and measures carbon dioxide sensor to determine occupancy level.

Commissioning –The process of starting up and verifying correct operation of a building system.

Conditioned air – Air that is heated, cooled, humidified, or dehumidified to maintain comfort in an interior space.

Constant volume – An air distribution system that varies the temperature of a fixed volume of air to maintain space comfort.

Delivered VAV – A self configuring system providing true pressure independent VAV control to smaller building applications. Delivered VAV requires a CCP with operator display, a Commercial Voyager VAV rooftop unit and VariTrane VAV boxes.

Demand control ventilation – A method of maintaining indoor air quality through intelligent ventilation based on occupancy. The quantity of ventilation is controlled based on indoor CO2 levels, which correlate to occupancy levels. Demand controlled ventilation saves money by reducing ventilation during periods of low occupancy.

Direct-expansion (DX) –When the refrigerant in the system is either condensed or evaporated directly by the medium being heated or cooled.

Discharge air (DA) – Air discharged from the air handler into the ducts.

Discharge air control – An air handling system that provides fixed temperature air (either fixed or variable volume). Other control devices vary the actual volume of air delivered to the space to maintain occupant comfort.

Economizer – A damper arrangement and automatic control system that allows a heating, ventilation and air conditioning (HVAC) system to supply up to 100 percent outside air to satisfy cooling demands, even if additional mechanical cooling is required

Exception schedule – A one time only time of day schedule in a system that is removed automatically after use

Free cooling – Outdoor air introduced to a system under correct conditions to provided cooling to a space. Also see also "Economizer"

HVAC Unit – An air moving device that conditions air. An HVAC unit may provide cooling, or heating and cooling. Typical HVAC units include packaged rooftop units, split systems, and water source heat pumps.

LCD – Liquid crystal display

NDIR – Non-dispersive infrared technology

Negative pressure –The condition that exists when more air is exhausted from a space than is supplied.

Non-volatile memory – System memory that retains programming with no battery or capacitor back up required

Normally closed (NC) – Electrical contacts that are closed (current flows) in the de-energized condition

Normally open (NO) – Electrical contacts that are open (no current flows) in the de-energized condition

Occupancy sensor – A binary sensor that transmits a signal upon detection of movement in the coverage area

Outdoor air (OA) –This is fresh air drawn in to provide space ventilation. Also see 'Ventilation air"

Outdoor air damper –The damper that draws fresh air into the air handling system for ventilation. Also referred to as the ventilation or fresh air damper

Override – A manual or automatic action taken to bypass normal operation

Packaged unitary system – An air handling system with all the major components contained in a single cabinet or installed in a single location

PIR – Passive infrared sensing technology (used in occupancy and motion detection sensors)

Polling –The method a VariTrac CCP uses to determine the need for heating or cooling from the air handling system by examining the zone requirements

Positive pressure –The condition that exists when more air is supplied to a space than is exhausted.

Pressure-dependent VAV control – A VAV unit with airflow quantity dependent upon static pressure. There is no zone flow sensor in pressure dependent VAV boxes.

Pressure-independent VAV control – A VAV unit with airflow quantity independent of duct static pressure. Actual airflow to the space is measured and controlled by an airflow sensor in the pressure independent VAV box.

Glossary

Priority shutdown – An immediate shutdown of the fan and heating or cooling stages in a VariTrac changeover bypass or Delivered VAV system caused by either the loss of critical system information or an external priority shutdown input

Pulse-width modulating reheat – Reheat that operates duct mounted electric coils on a 0-100% duty cycle in response to increased space heating demand.

Reheat device – A source of heat located downstream from a control device such as a VAV box to add heat to air entering a space to provide occupant comfort

ReliaTel (RTRM) – The latest generation Trane factory mounted unitary controller.

Return air (RA) – Air returned to the air handler from the conditioned space, to be reconditioned.

Setpoint –The desired room temperature to be achieved and maintained by an HVAC system.

Setpoint limit – An electronic or manual constraint imposed on a setpoint to prevent misadjustment

SPDT – A relay with of one set of normally-open, normally-closed contacts

Staged electric reheat – Reheat that operates one or more duct mounted electric coils in a series in response to increased space heating demand.

Staged (or perimeter) hot water reheat – Reheat that operates duct-mounted hot water or space-mounted electric or hot water reheat coils in response to increased space heating demand

Static pressure –The difference between the air pressure on the inside of the duct and outside of the duct. Static pressure is an indicator of how much pressure the fans are creating and how effective they will be at distributing the supply air through the ducts.

Supply air (SA) – air which blows out of the air handler into the ducts. See also "Discharge air (DA)"

Terminal unit – HVAC equipment that provides comfort directly to a space.

Thermal requirements –The heating or cooling load requirements for a specific area or space in a building. Care must be taken to not control areas with different thermal requirements from one air handling system

Touch-screen operator display – The LCD panel mounted onto a VariTrac CCP to allow direct user interface and time of day programming for the system

Unit control module UCM – A Trane microelectronic circuit board that controls individual HVAC equipment. May link to an Integrated Comfort System

Unitary – one or more factory-made assemblies which normally include an evaporator or cooling coil, an air moving device, and a compressor and condenser combination

Variable air volume (VAV) – an air handling system that varies the volume (amount) of constant temperature air to a space to control comfort

VariTrac –The Trane changeover bypass VAV system

VariTrane –The Trane pressure independent VAV box

VAV box – The damper or air valve (plus associated controller) that controls the zone air volume in a VAV system. Also see "Variable air volume"

Ventilation air –The outdoor air drawn into the HVAC unit to provide fresh air to the space. Also see "Outdoor air (OA)"

Voting – See "Polling"

Zone sensor –The device that measures a variable (usually temperature) in a space and sends it to a controller. Commonly referred to as a thermostat.

Trane
A business of American Standard Companies
www.trane.com

For more information contact your local district office or email us at comfort@trane.com

Literature Order Number	VAV-PRC003-EN
File Number	PL-TD-VAV-000-PRC003-EN-0604
Supersedes	VAV-DS-12
Stocking Location	La Crosse

Trane has a policy of continuous product and product data improvement and reserves the right to change design and specifications without notice.